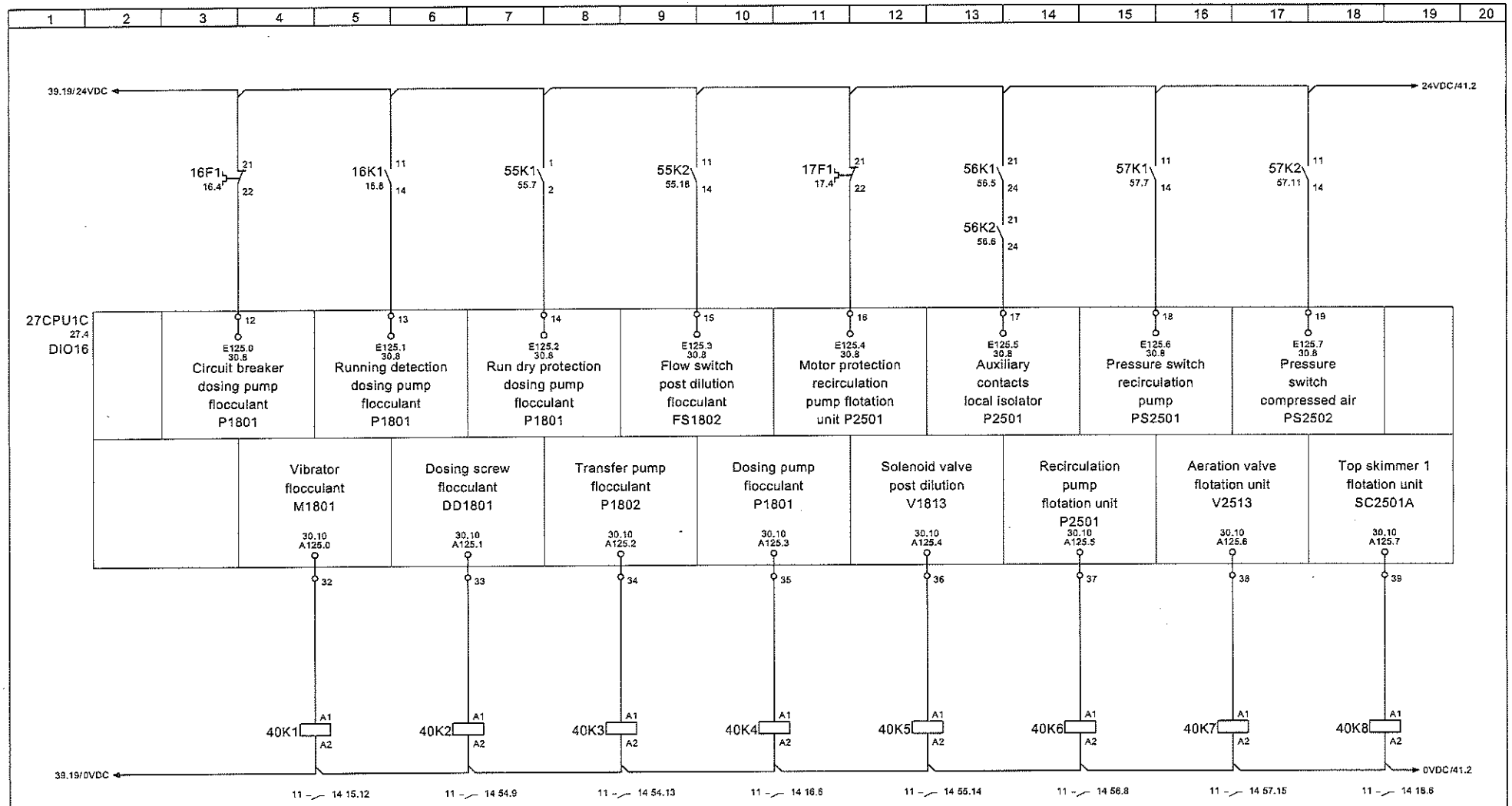


| | | | | | |
|---|---|---|---|---|---|
| Project : Austral Ilo - 112048 | | Revision : A | Created on : 17.07.06 | VISION ON SUSTAINABILITY | nijhuis WATER TECHNOLOGY |
| Order : 112048.145 | Remarks : PLC controlled panel | Revision by : PAV | Check : PAV | Copyright reserved | |
| Engineer : KRM | Title : PLC wiring | Revision date : 28.12.12 | Page : 40 / 78 | www.nijhuis-water.com - T +31 (0)315 655 466 | |

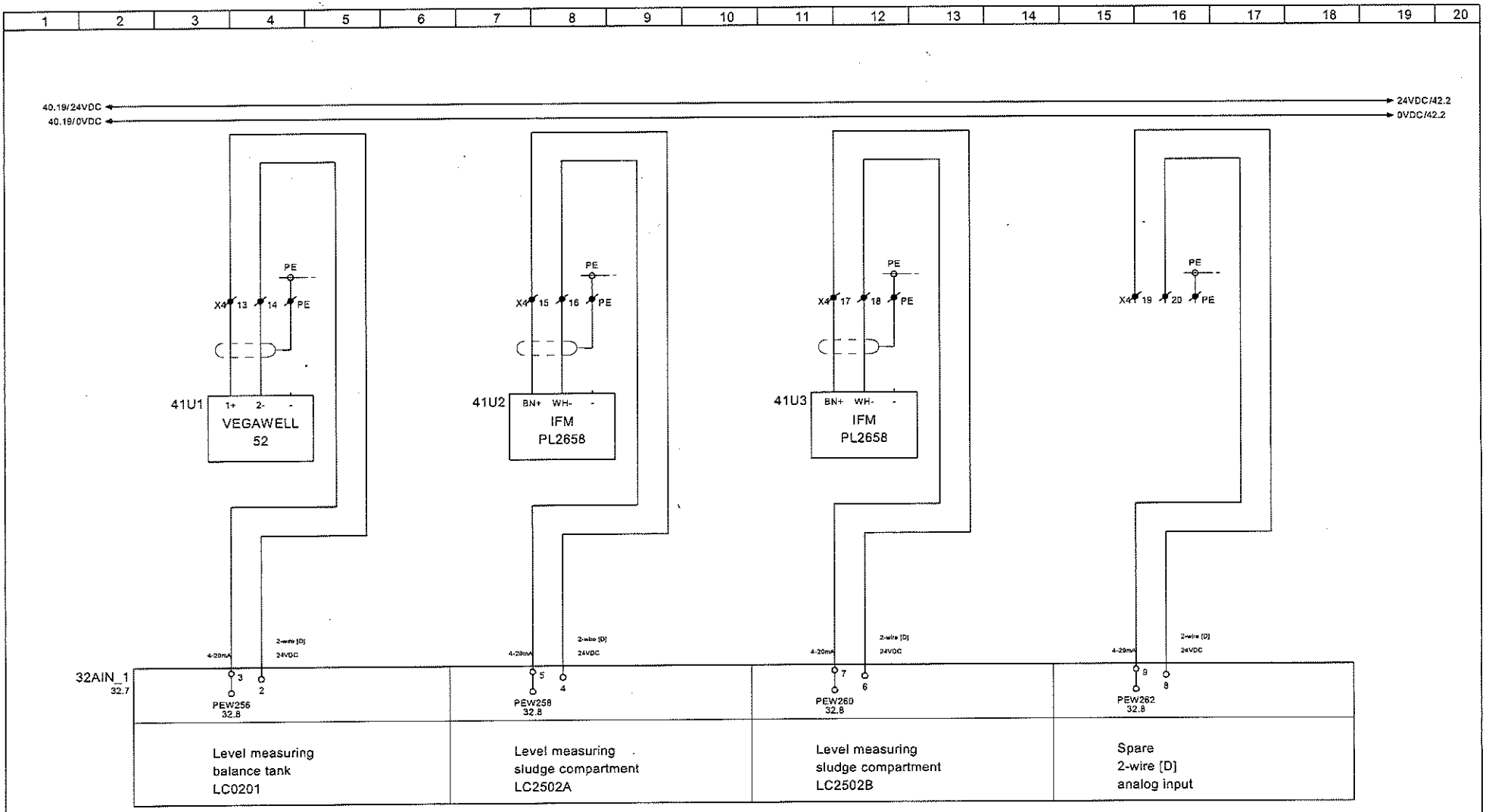


| | | | | | |
|---|---|---|---|---|---|
| Project : Austral Ilo - 112048 | | Revision : A | Created on : 17.07.06 | VISION ON SUSTAINABILITY | nijhuis WATER TECHNOLOGY |
| Order : 112048.145 | Remarks : PLC controlled panel | Revision by : PAV | Check : PAV | Copyright reserved | |
| Engineer : KRM | Title : PLC wiring | Revision date : 28.12.12 | Page : 41 / 78 | www.nijhuis-water.com - T +31 (0)315 655 465 | |

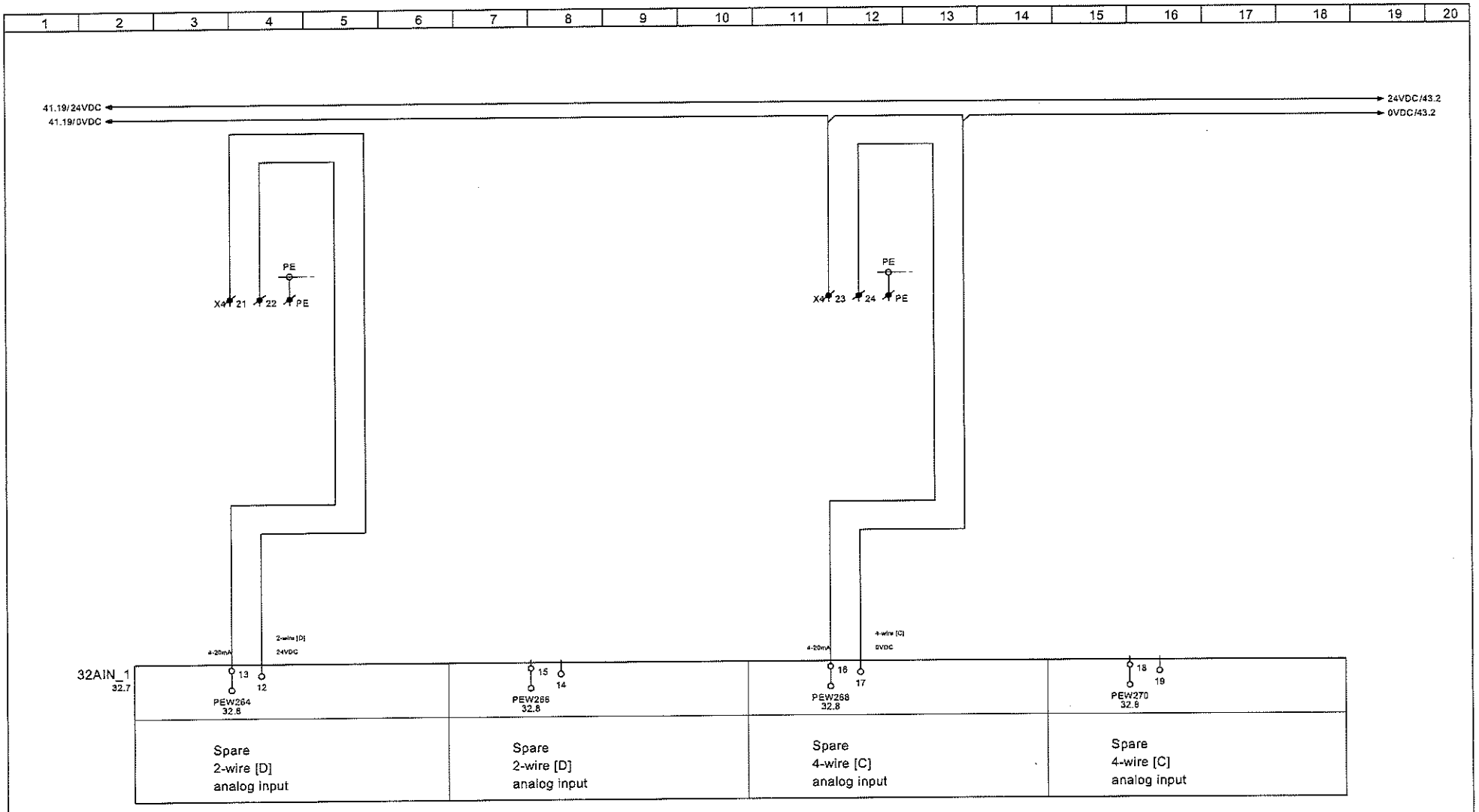


| | | | | | |
|---|---|---|---|---|---|
| Project : Austral ilo - 112048 | | Revision : A | Created on : 17.07.06 | VISION ON SUSTAINABILITY | nijhuis WATER TECHNOLOGY |
| Order : 112048.145 | Remarks : PLC controlled panel | Revision by : PAV | Check : PAV | Copyright reserved | |
| Engineer : KRM | Title : PLC wiring | Revision date : 28.12.12 | Page : 42 / 78 | www.nijhuis-water.com - T +31 (0)315 655 466 | |

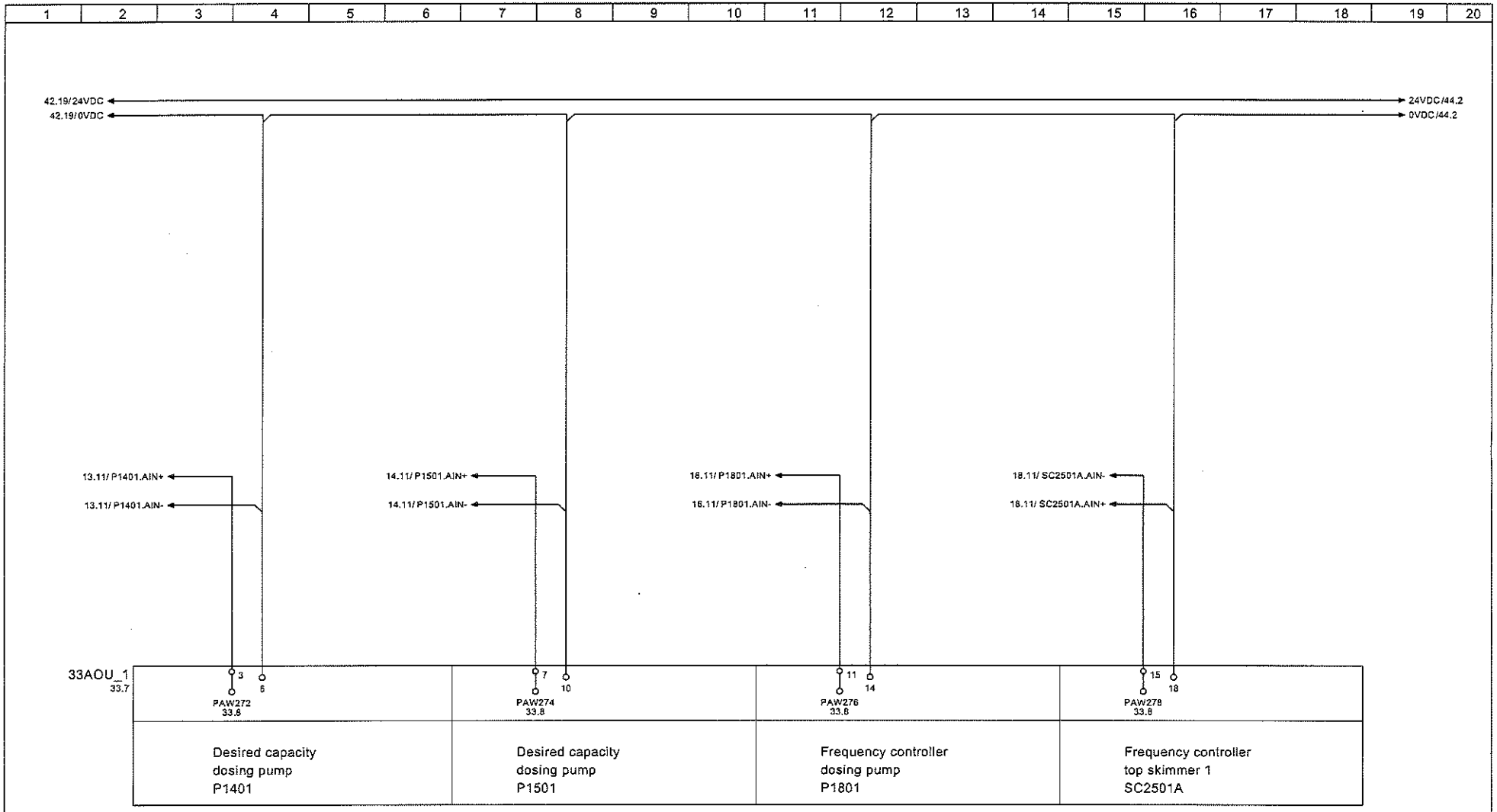


| | | | | | |
|---|---|---|---|---|---|
| Project : Austral Ilo - 112048 | | Revision : A | Created on : 17.07.06 | VISION ON SUSTAINABILITY | nijhuis WATER TECHNOLOGY |
| Order : 112048.145 | Remarks : PLC controlled panel | Revision by : PAV | Check : PAV | Copyright reserved | |
| Engineer : KRM | Title : PLC wiring | Revision date : 28.12.12 | Page : 43 / 78 | www.nijhuis-water.com - T +31 (0)315 655 466 | |

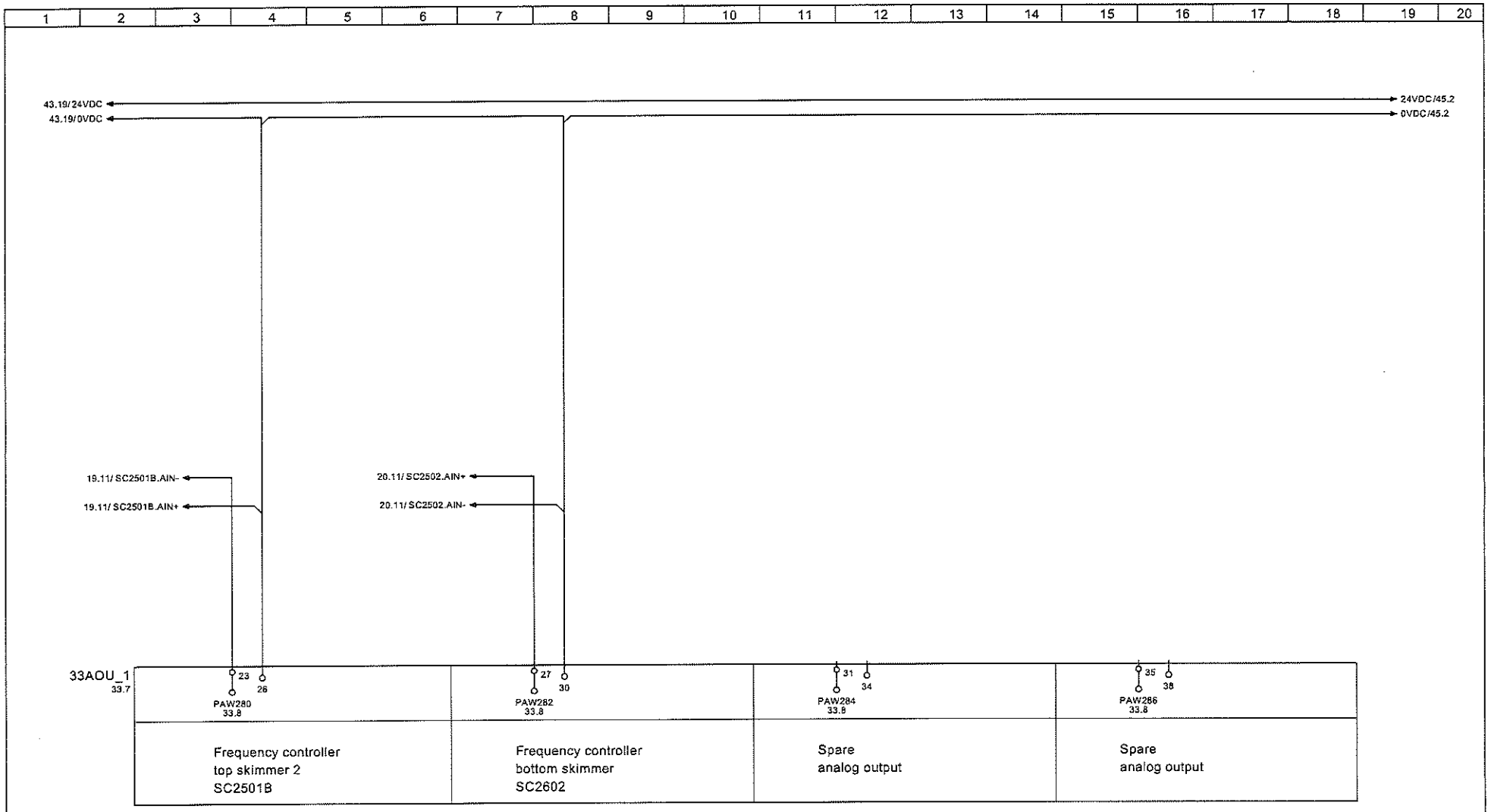


| | | | | | |
|---|---|---|---|---|---|
| Project : Austral Ilo - 112048 | | Revision : A | Created on : 17.07.06 | VISION ON SUSTAINABILITY | nijhuis WATER TECHNOLOGY |
| Order : 112048.145 | Remarks : PLC controlled panel | Revision by : PAV | Check : PAV | Copyright reserved | |
| Engineer : KRM | Title : PLC wiring | Revision date : 28.12.12 | Page : 44 / 78 | www.nijhuis-water.com - T +31 (0)315 555 466 | |

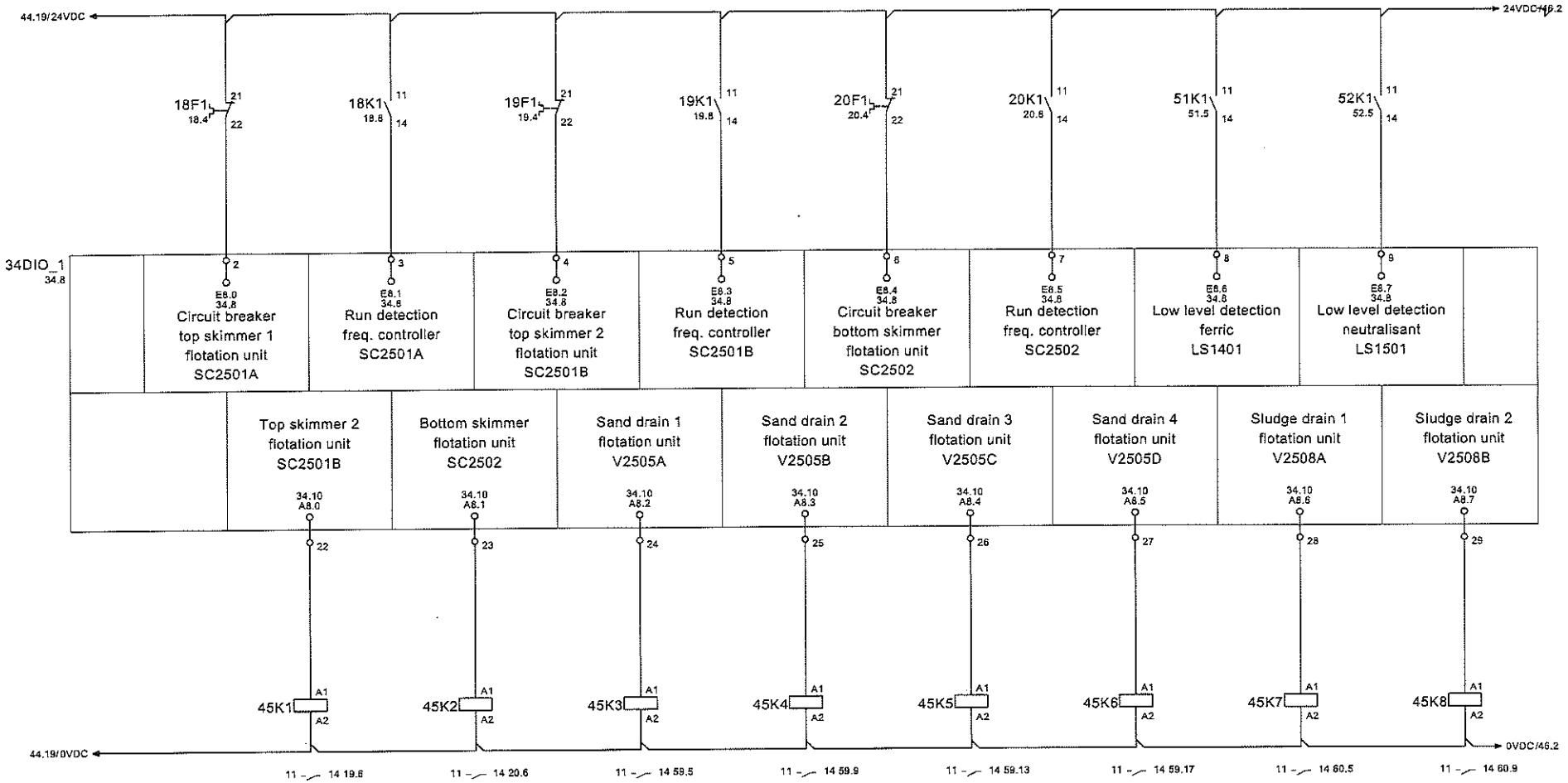


| | | | | | |
|---|---|---|---|---|---|
| Project : Austral Ilo - 112048 | | Revision : A | Created on : 17.07.06 | VISION ON SUSTAINABILITY | nijhuis WATER TECHNOLOGY |
| Order : 112048.145 | Remarks : PLC controlled panel | Revision by : PAV | Check : PAV | Copyright reserved | |
| Engineer : KRM | Title : PLC wiring | Revision date : 28.12.12 | Page : 45 / 78 | www.nijhuis-water.com - T +31 (0)315 655 456 | |

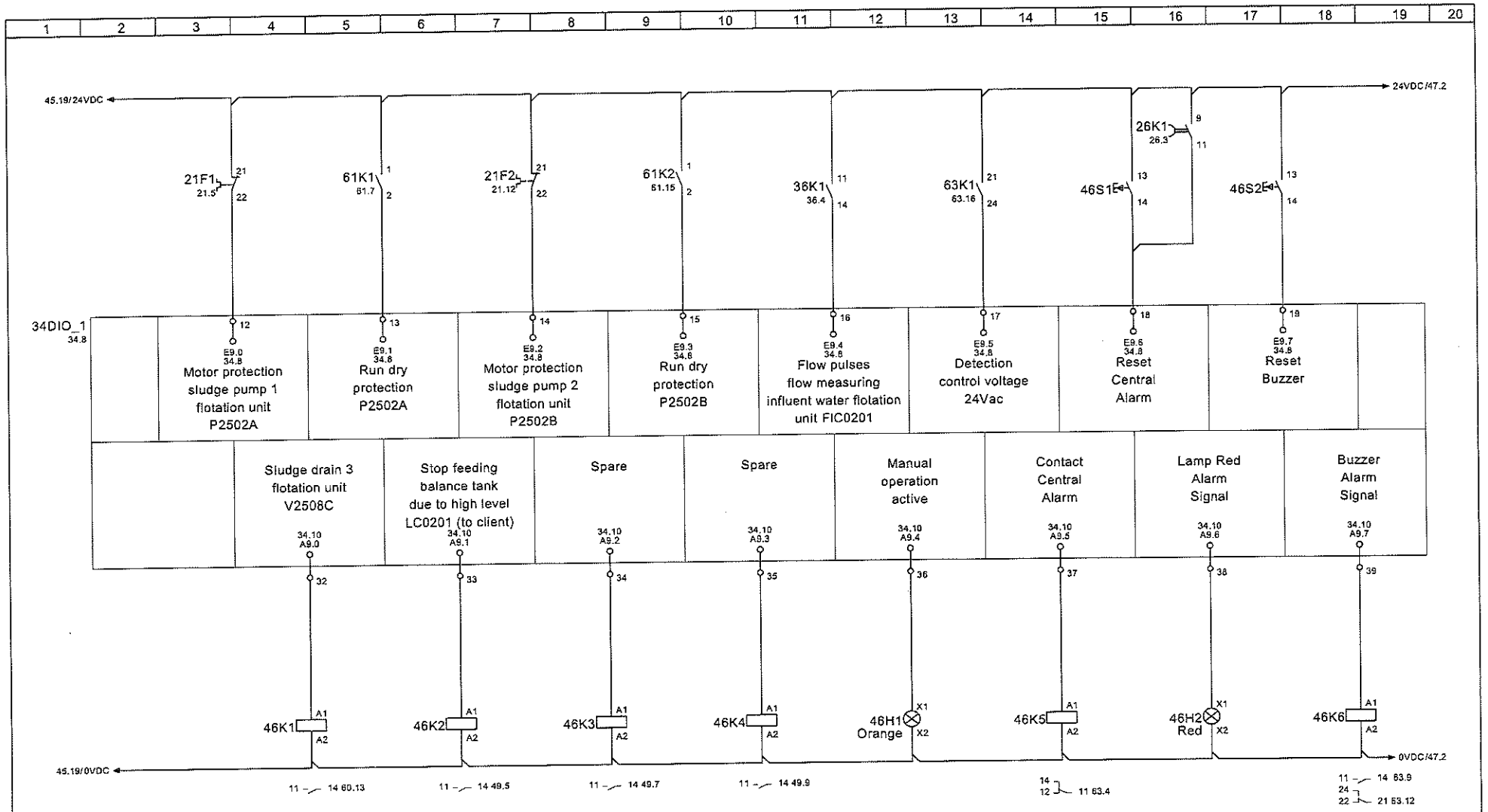


| | | | | | |
|---|---|---|---|---|---|
| Project : Austral Ilo - 112048 | | Revision : A | Created on : 17.07.06 | VISION ON SUSTAINABILITY | nijhuis WATER TECHNOLOGY |
| Order : 112048.145 | Remarks : PLC controlled panel | Revision by : PAV | Check : PAV | Copyright reserved | |
| Engineer : KRM | Title : PLC wiring | Revision date : 28.12.12 | Page : 46 / 78 | www.nijhuis-water.com - T +31 (0)315 655 468 | |

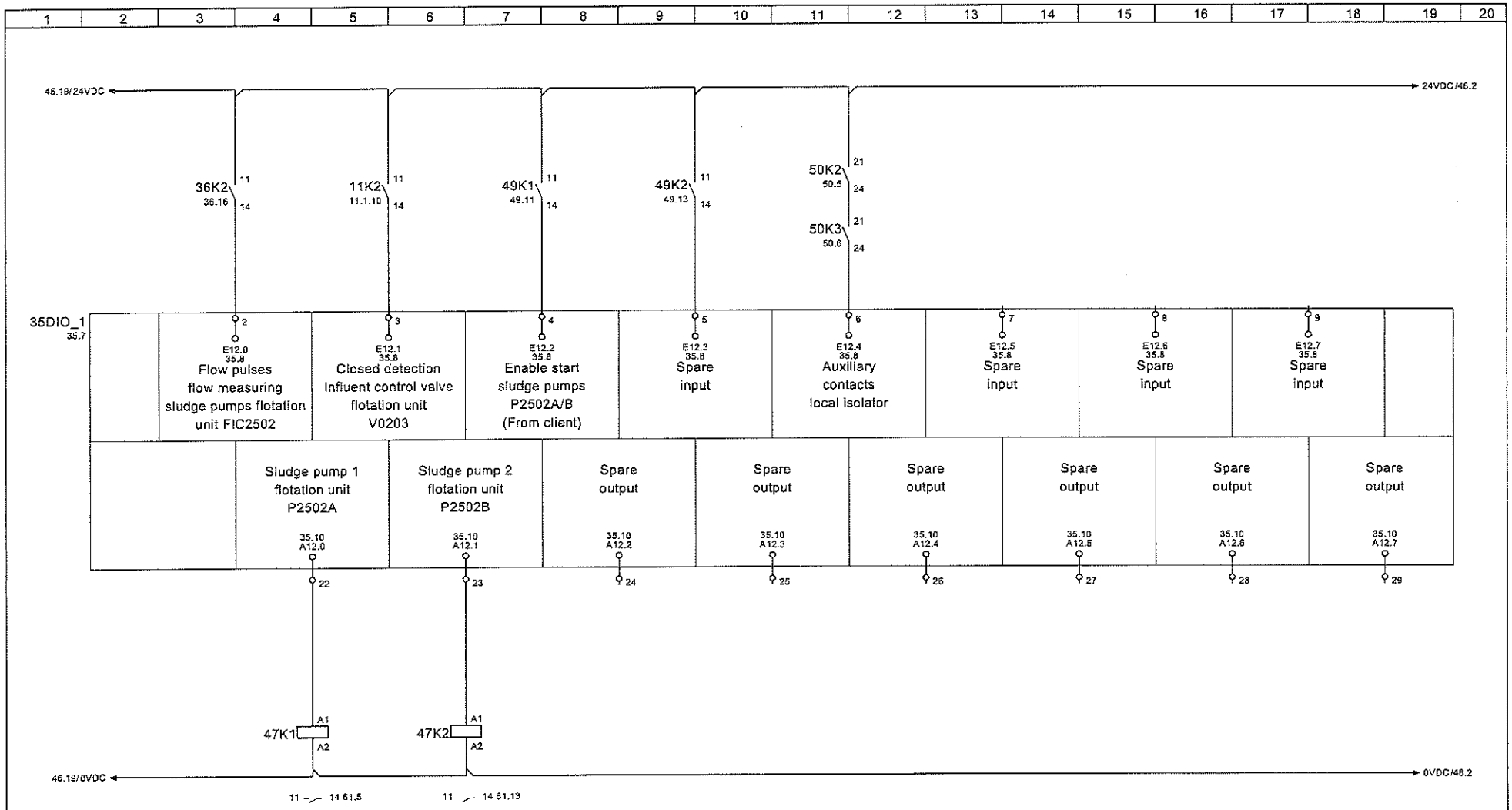


| | | | | | |
|---|---|---|---|---|---|
| Project : Austral Ilo - 112048 | | Revision : A | Created on : 17.07.06 | VISION ON SUSTAINABILITY | nijhuis WATER TECHNOLOGY |
| Order : 112048.145 | Remarks : PLC controlled panel | Revision by : PAV | Check : PAV | Copyright reserved | |
| Engineer : KRM | Title : PLC wiring | Revision date : 13.03.13 | Page : 47 / 78 | www.nijhuis-water.com - T +31 (0)315 655 466 | |

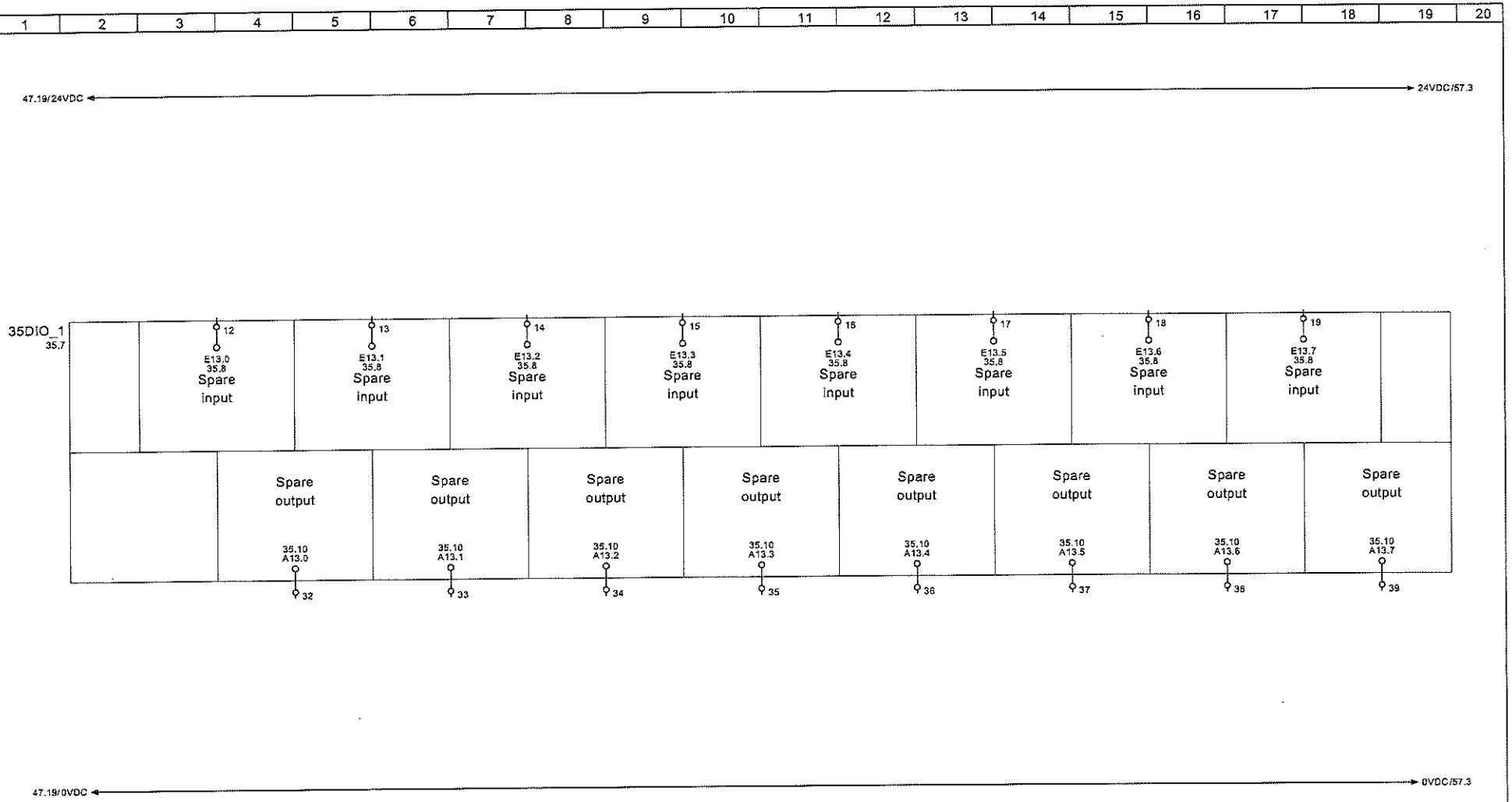


| | | | | | |
|---|---|---|---|---|---|
| Project : Austral Ilo - 112048 | | Revision : A | Created on : 17.07.06 | VISION ON SUSTAINABILITY | nijhuis WATER TECHNOLOGY |
| Order : 112048.145 | Remarks : PLC controlled panel | Revision by : KRM | Check : PAV | Copyright reserved<br>www.nijhuis-water.com - T +31 (0)315 655 466 | |
| Engineer : KRM | Title : PLC wiring | Revision date : 06.04.12 | Page : 48 / 78 | | |

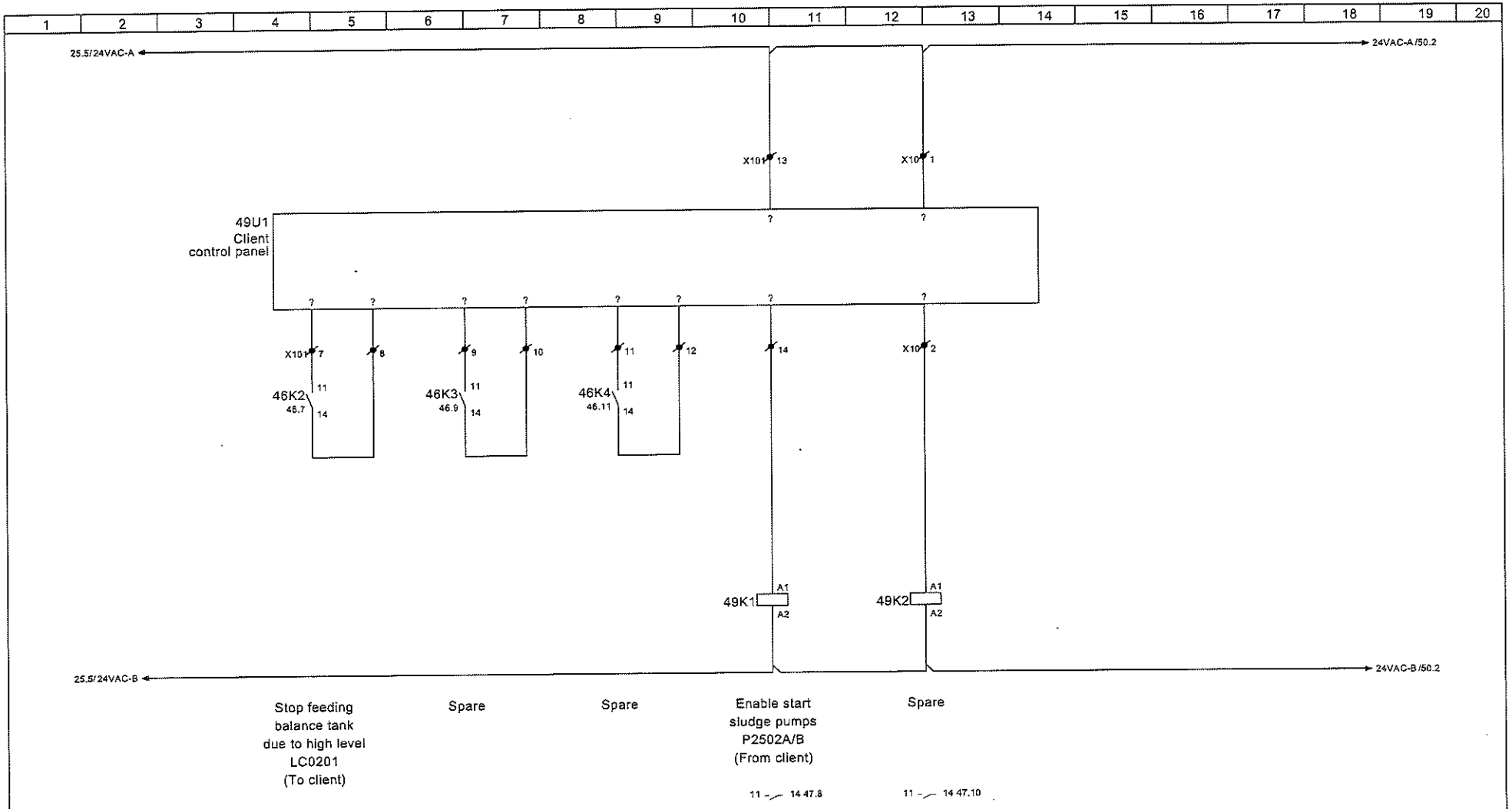


| | | | | | |
|---|---|---|---|---|---|
| Project : Austral Ilo - 112048 | | Revision : A | Created on : 17.07.06 | VISION ON SUSTAINABILITY | nijhuis WATER TECHNOLOGY |
| Order : 112048.145 | Remarks : PLC controlled panel | Revision by : PAV | Check : PAV | Copyright reserved | |
| Engineer : KRM | Title : Control wiring | Revision date : 10.01.13 | Page : 49 / 78 | www.nijhuis-water.com - T +31 (0)315 655 466 | |

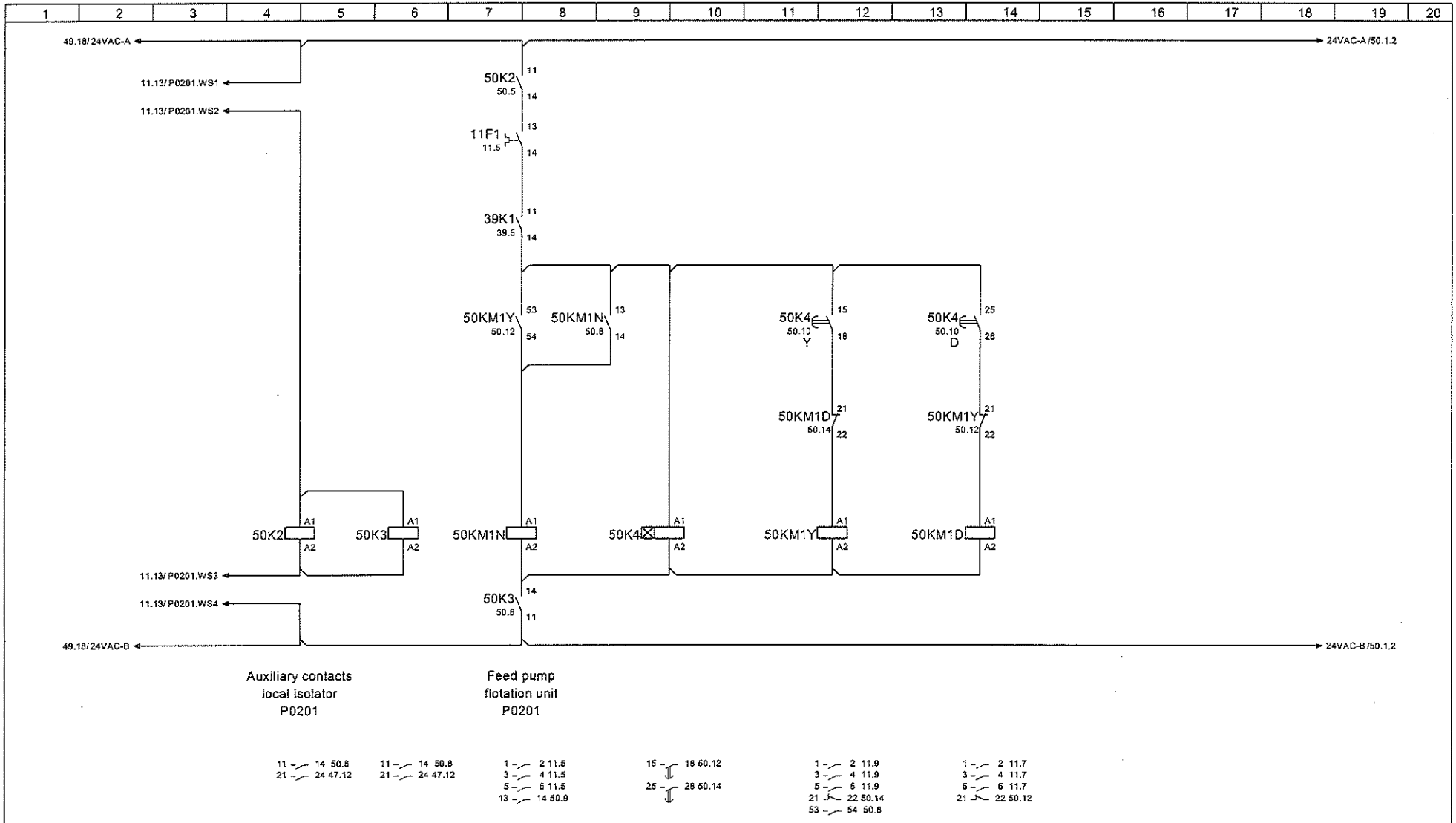


| | | | | | |
|---|---|---|---|---|---|
| Project : Austral Ilo - 112048 | | Revision : A | Created on : 17.07.06 | VISION ON SUSTAINABILITY | nijhuis WATER TECHNOLOGY |
| Order : 112048.145 | Remarks : PLC controlled panel | Revision by : PAV | Check : PAV | Copyright reserved | |
| Engineer : KRM | Title : Control wiring | Revision date : 13.03.13 | Page : 50 / 78 | www.nijhuis-water.com - T +31 (0)315 655 466 | |

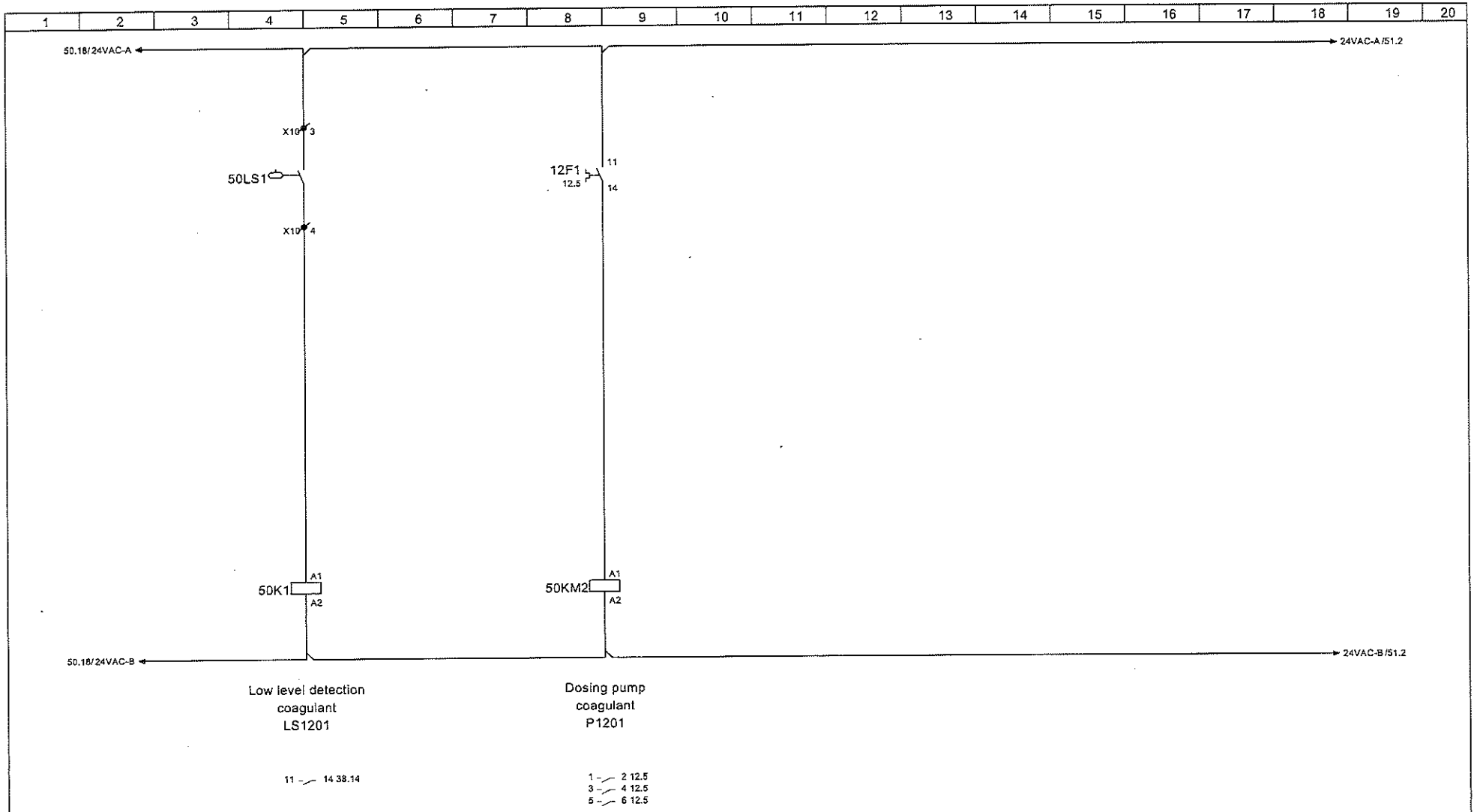


| | | | | | |
|---|---|---|---|---|---|
| Project : Austral Ilo - 112048 | | Revision : A | Created on : 17.07.06 | VISION ON SUSTAINABILITY | nijhuis WATER TECHNOLOGY |
| Order : 112048.145 | Remarks : PLC controlled panel | Revision by : RKH | Check : PAV | Copyright reserved | |
| Engineer : RKH | Title : Control wiring | Revision date : 10.01.13 | Page : 50.1 / 78 | www.nijhuis-water.com - T +31 (0)315 655 466 | |

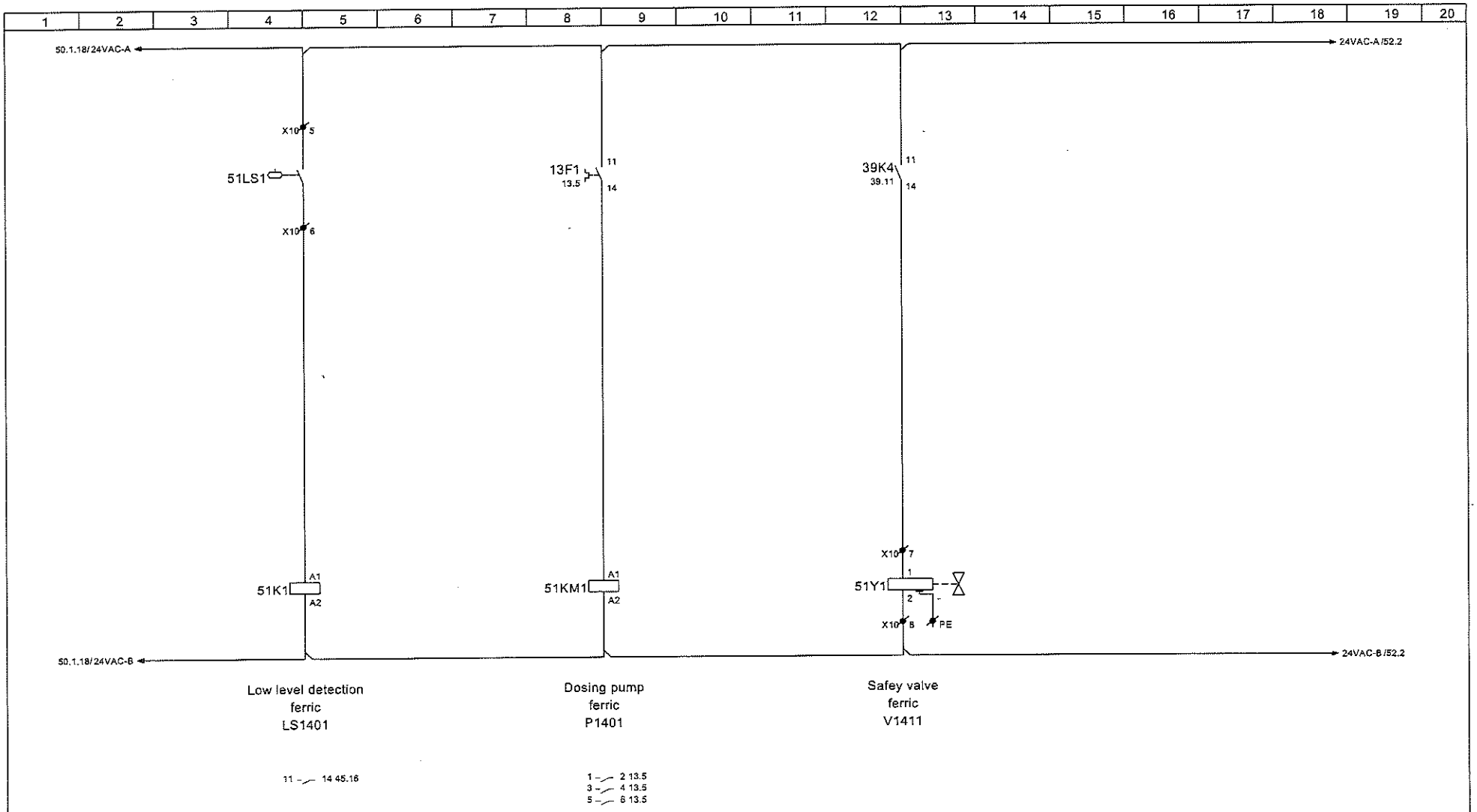


| | | | | | |
|---|---|---|---|---|---|
| Project : Austral Ilo - 112048 | | Revision : A | Created on : 17.07.06 | VISION ON SUSTAINABILITY | nijhuis WATER TECHNOLOGY |
| Order : 112048.145 | Remarks : PLC controlled panel | Revision by : RKH | Check : PAV | Copyright reserved | |
| Engineer : KRM | Title : Control wiring | Revision date : 10.01.13 | Page : 51 / 78 | www.nijhuis-water.com - T +31 (0)315 655 466 | |

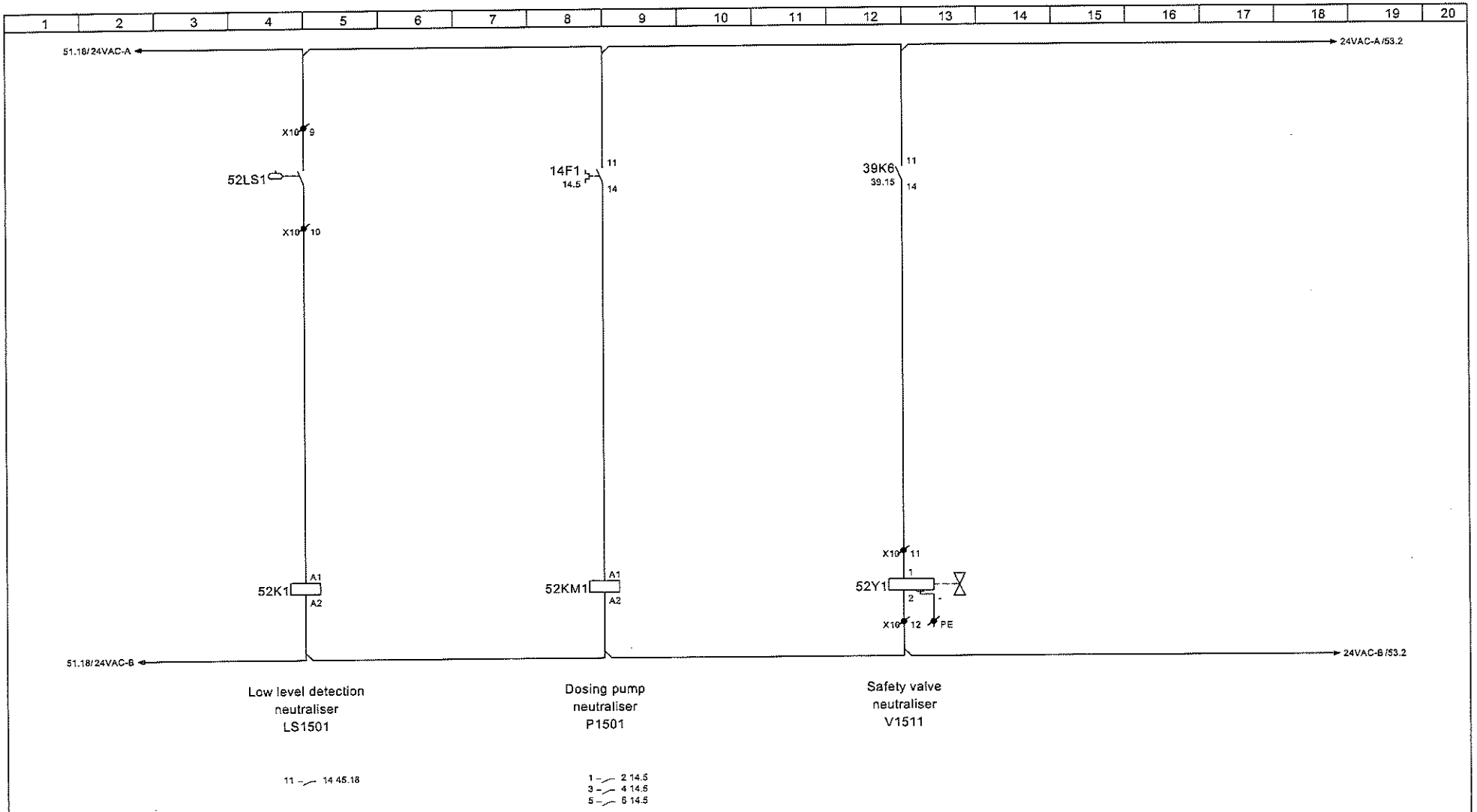


| | | | | | |
|---|---|---|---|---|---|
| Project : Austral Ilo - 112048 | | Revision : A | Created on : 17.07.06 | VISION ON SUSTAINABILITY | nijhuis WATER TECHNOLOGY |
| Order : 112048.145 | Remarks : PLC controlled panel | Revision by : PAV | Check : PAV | Copyright reserved | |
| Engineer : KRM | Title : Control wiring | Revision date : 28.12.12 | Page : 52 / 78 | www.nijhuis-water.com - T +31 (0)315 655 466 | |

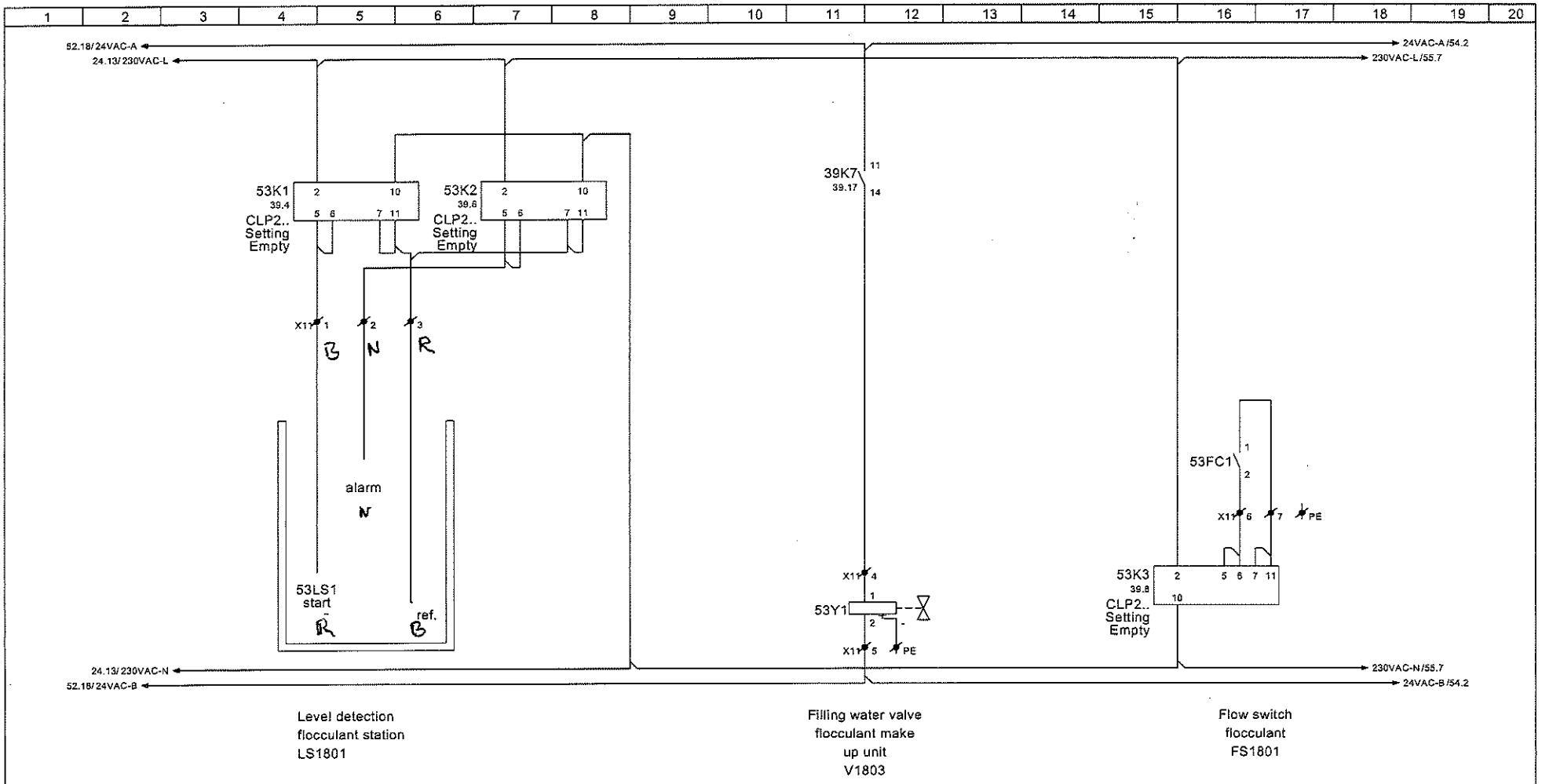


| | | | | | |
|---|---|---|---|---|---|
| Project : Austral Ilo - 112048 | | Revision : A | Created on : 17.07.06 | VISION ON SUSTAINABILITY | nijhuis WATER TECHNOLOGY |
| Order : 112048.145 | Remarks : PLC controlled panel | Revision by : PAV | Check : PAV | Copyright reserved | |
| Engineer : KRM | Title : Control wiring | Revision date : 28.12.12 | Page : 53 / 78 | www.nijhuis-water.com - T +31 (0)315 655 466 | |

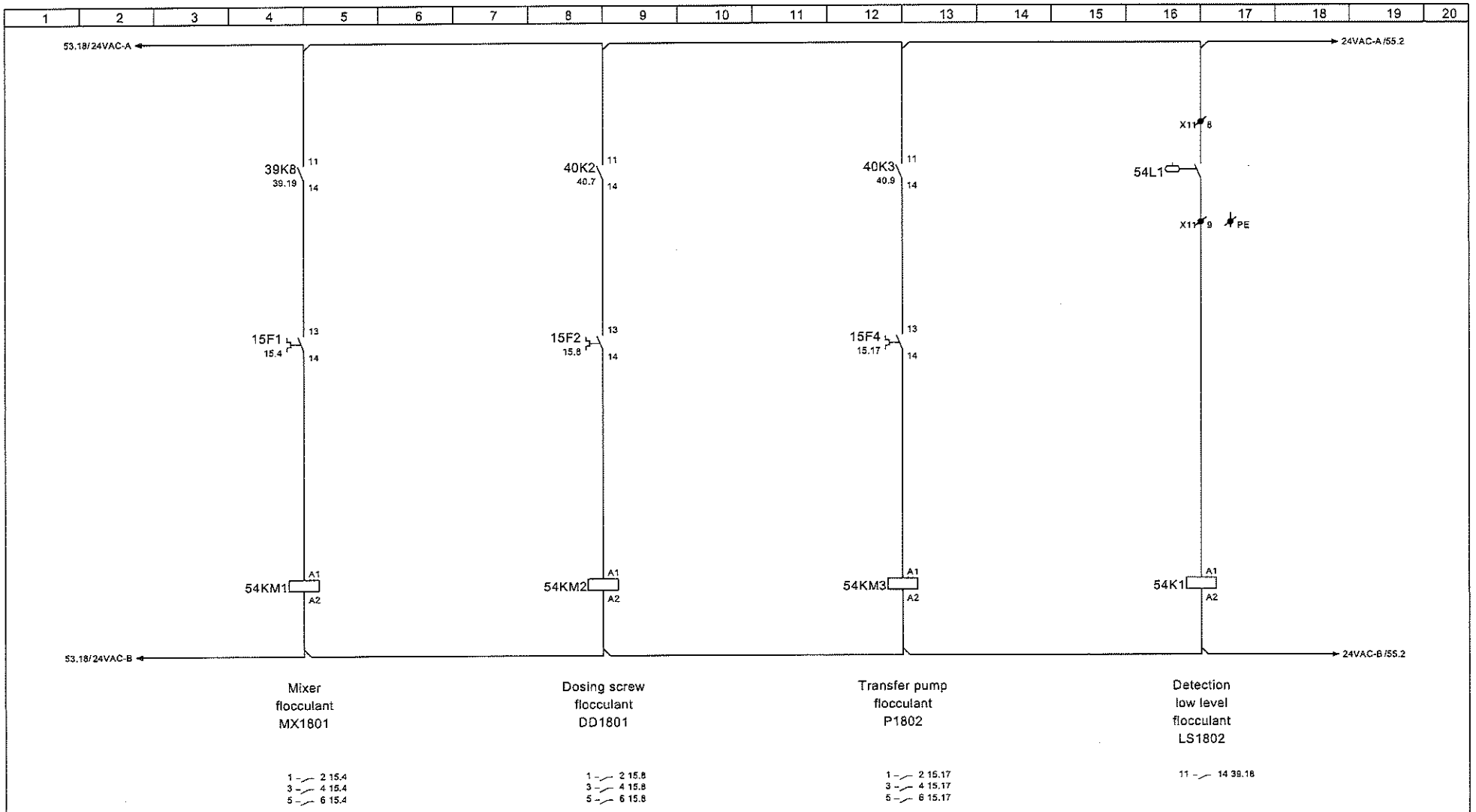


| | | | | | |
|---|---|---|---|---|---|
| Project : Austral Ilo - 112048 | | Revision : A | Created on : 17.07.06 | VISION ON SUSTAINABILITY | nijhuis WATER TECHNOLOGY |
| Order : 112048.145 | Remarks : PLC controlled panel | Revision by : PAV | Check : PAV | Copyright reserved | |
| Engineer : KRM | Title : Control wiring | Revision date : 28.12.12 | Page : 54 / 78 | www.nijhuis-water.com - T +31 (0)315 555 466 | |

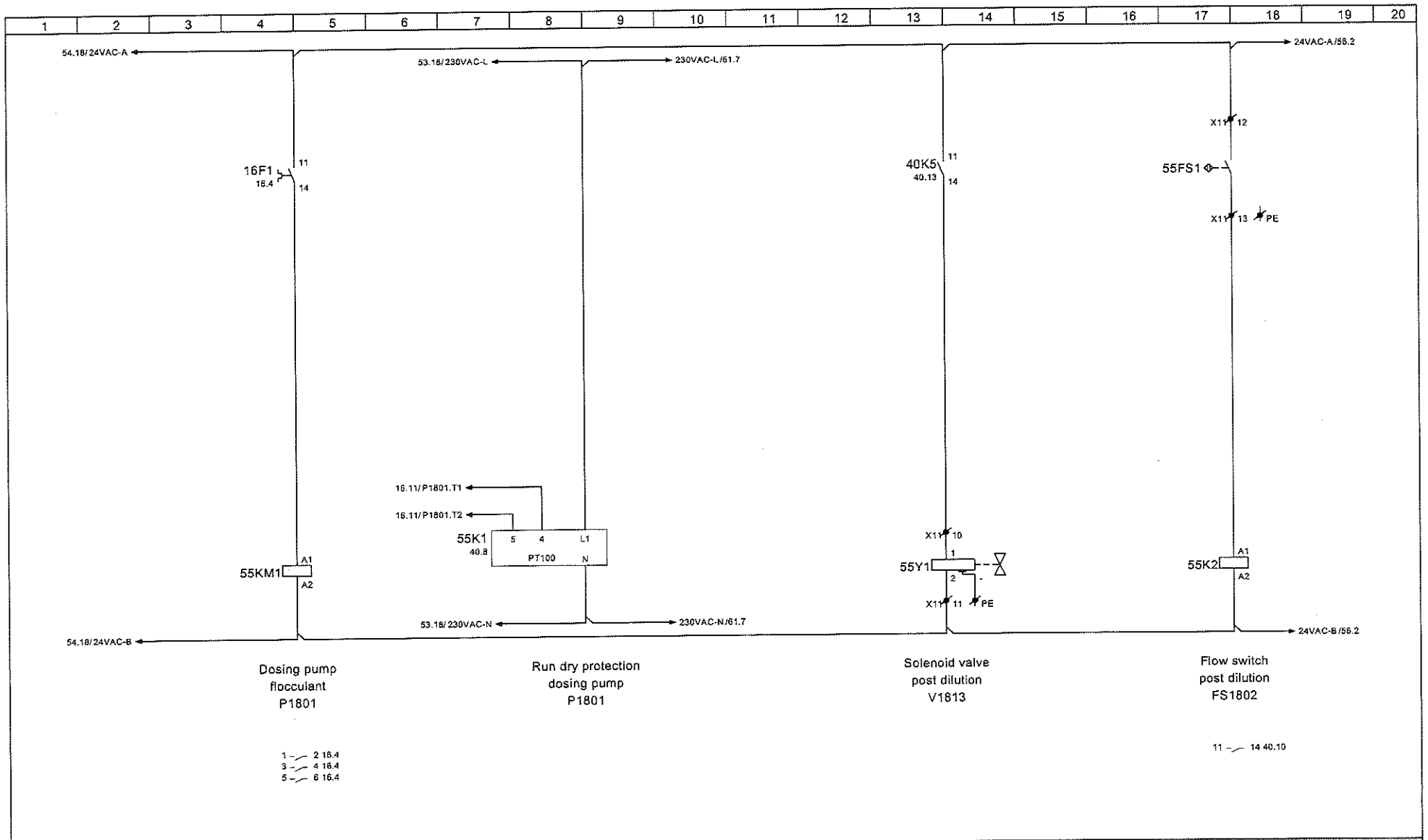


| | | | | | |
|---|---|---|---|---|---|
| Project : Austral Ilo - 112048 | | Revision : A | Created on : 17.07.06 | VISION ON SUSTAINABILITY | nijhuis WATER TECHNOLOGY |
| Order : 112048.145 | Remarks : PLC controlled panel | Revision by : PAV | Check : PAV | Copyright reserved | |
| Engineer : KRM | Title : Control wiring | Revision date : 28.12.12 | Page : 55 / 78 | www.nijhuis-water.com - T +31 (0)315 655 466 | |

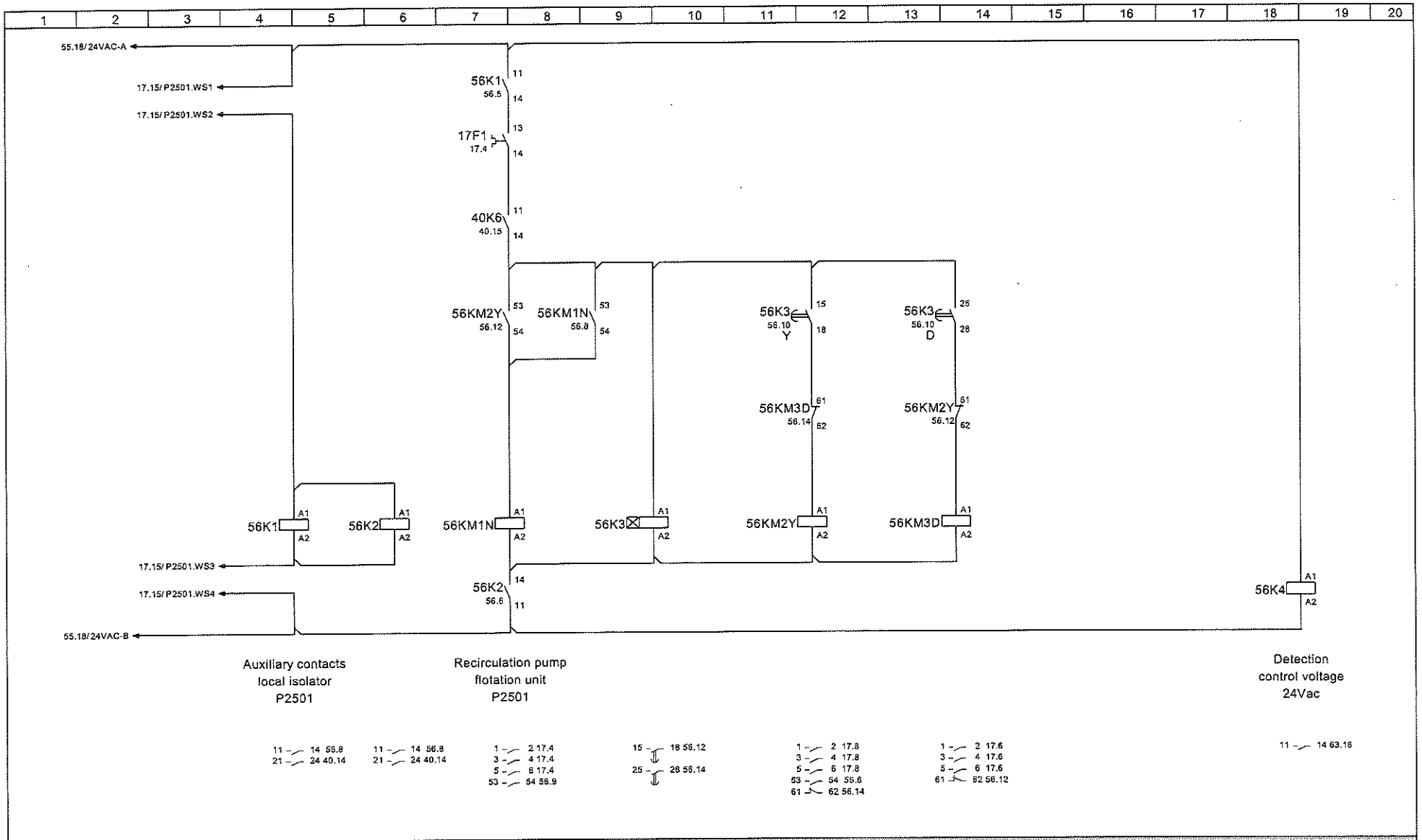


| | | | | | |
|---|---|---|---|---|---|
| Project : Austral Ilo - 112048 | | Revision : A | Created on : 17.07.06 | VISION ON SUSTAINABILITY | nijhuis WATER TECHNOLOGY |
| Order : 112048.145 | Remarks : PLC controlled panel | Revision by : PAV | Check : PAV | Copyright reserved | |
| Engineer : KRM | Title : Control wiring | Revision date : 10.01.13 | Page : 56 / 78 | www.nijhuis-water.com - T +31 (0)315 855 466 | |

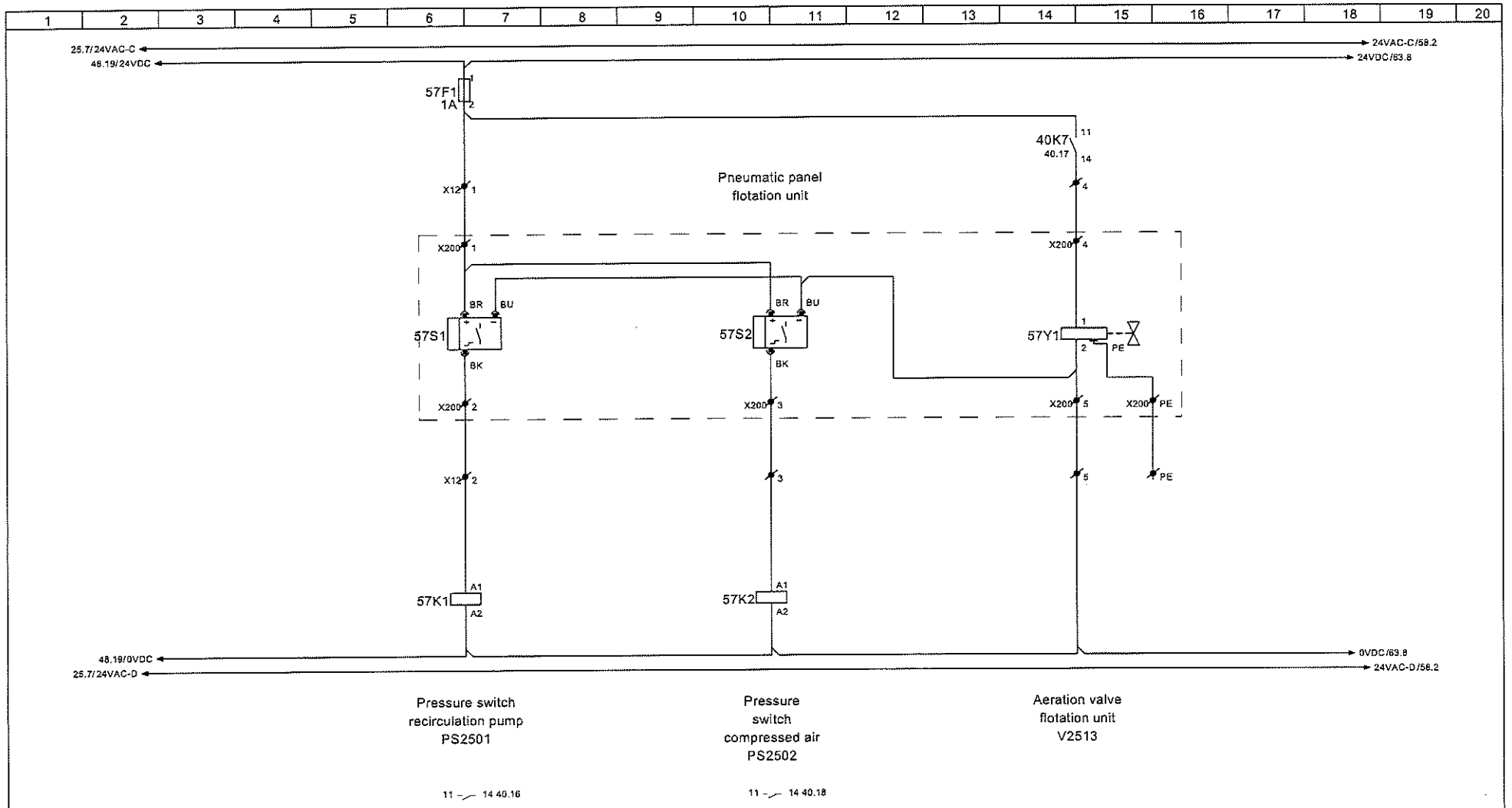


| | | | | | |
|---|---|---|---|---|---|
| Project : Austral Ilo - 112048 | | Revision : A | Created on : 17.07.06 | VISION ON SUSTAINABILITY | nijhuis WATER TECHNOLOGY |
| Order : 112048.145 | Remarks : PLC controlled panel | Revision by : PAV | Check : PAV | Copyright reserved | |
| Engineer : KRM | Title : Control wiring | Revision date : 10.01.13 | Page : 57 / 78 | www.nijhuis-water.com - T +31 (0)315 655 466 | |

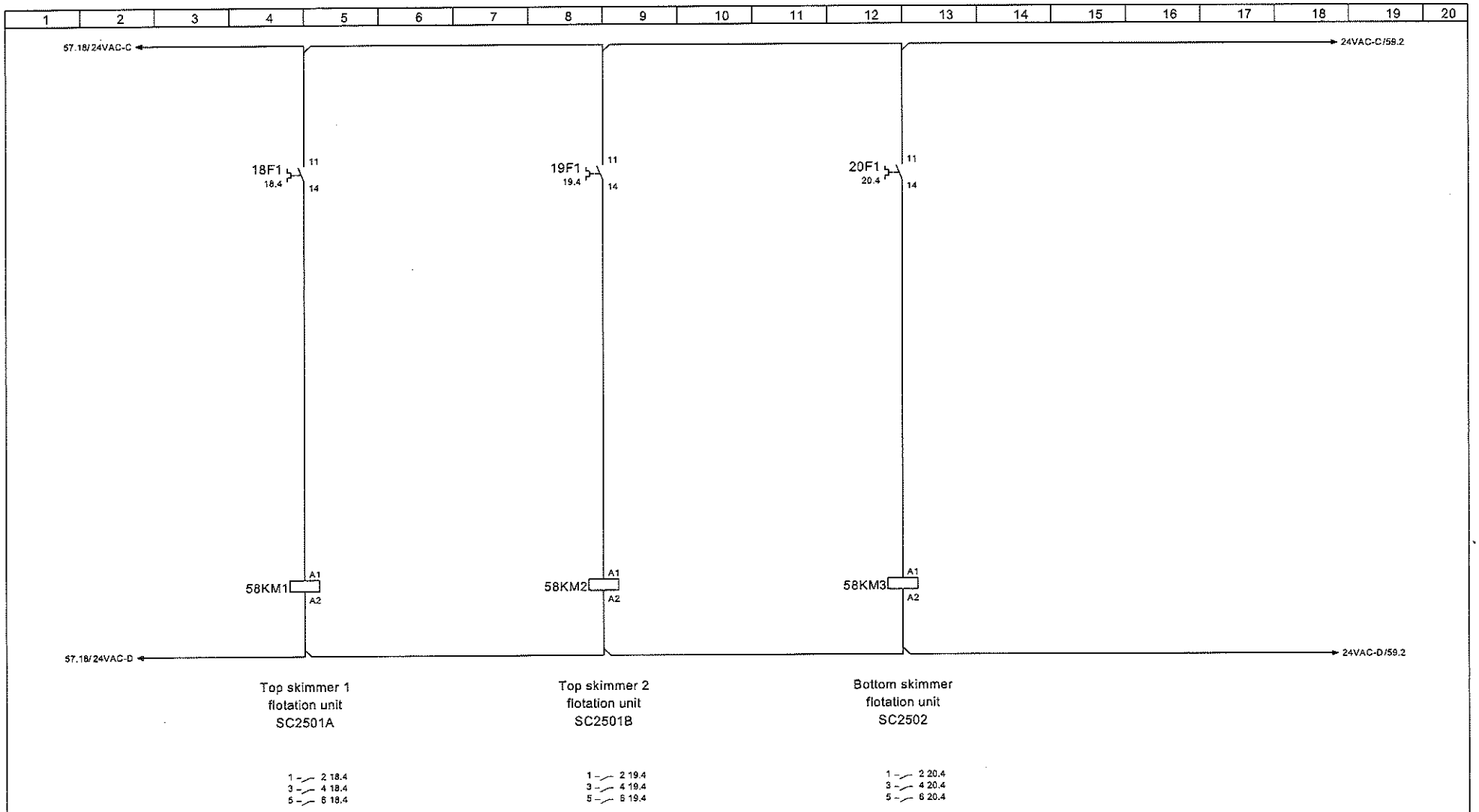


| | | | | | |
|---|---|---|---|---|---|
| Project : Austral Ilo - 112048 | | Revision : A | Created on : 17.07.06 | VISION ON SUSTAINABILITY | nijhuis WATER TECHNOLOGY |
| Order : 112048.145 | Remarks : PLC controlled panel | Revision by : PAV | Check : PAV | Copyright reserved | |
| Engineer : KRM | Title : Control wiring | Revision date : 28.12.12 | Page : 58 / 78 | www.nijhuis-water.com - T +31 (0)315 655 466 | |

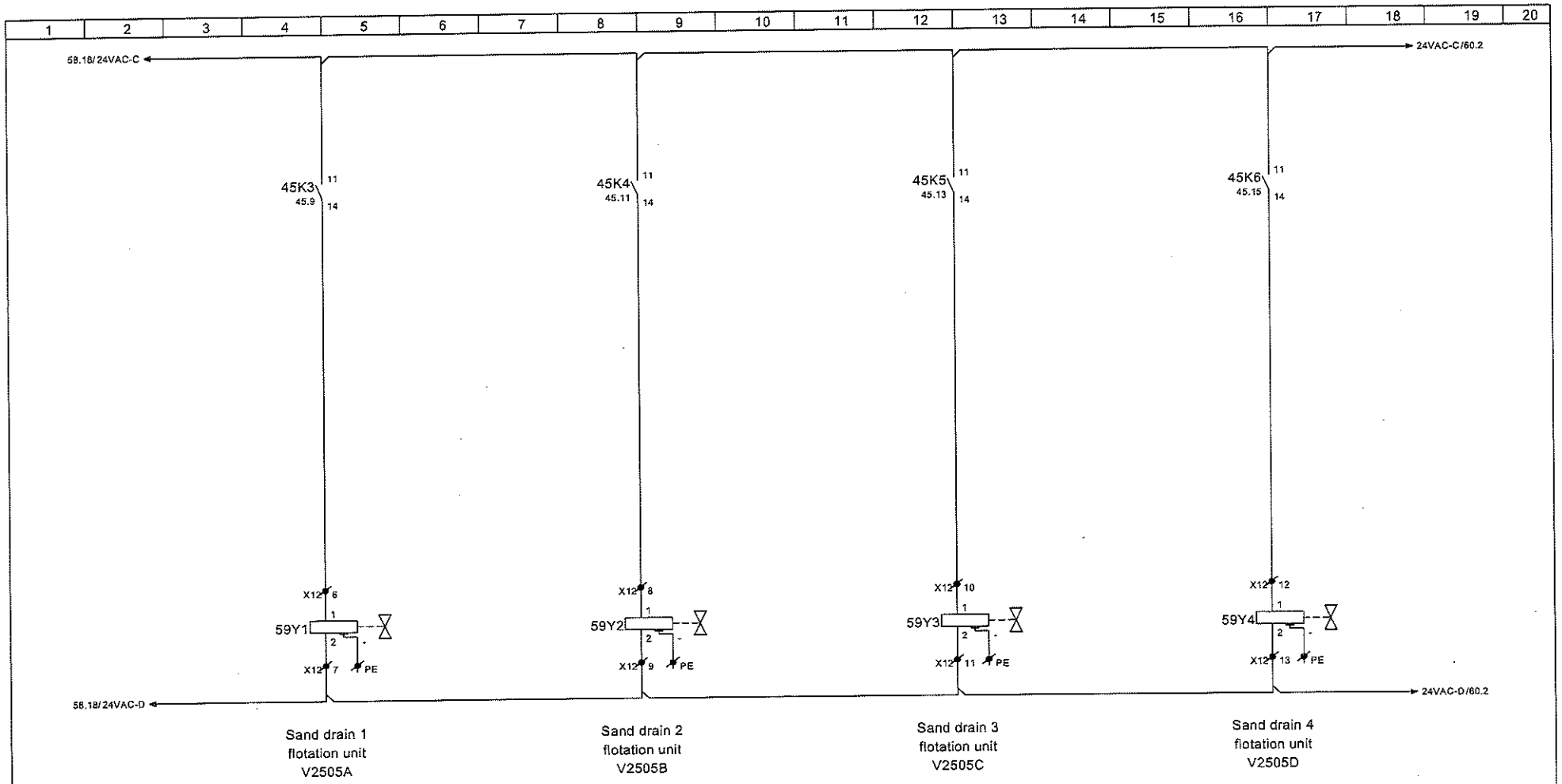


| | | | | | |
|---|---|---|---|---|---|
| Project : Austral Ilo - 112048 | | Revision : A | Created on : 17.07.06 | VISION ON SUSTAINABILITY | nijhuis WATER TECHNOLOGY |
| Order : 112048.145 | Remarks : PLC controlled panel | Revision by : PAV | Check : PAV | Copyright reserved | |
| Engineer : KRM | Title : Control wiring | Revision date : 28.12.12 | Page : 59 / 78 | www.nijhuis-water.com - T +31 (0)315 655 466 | |

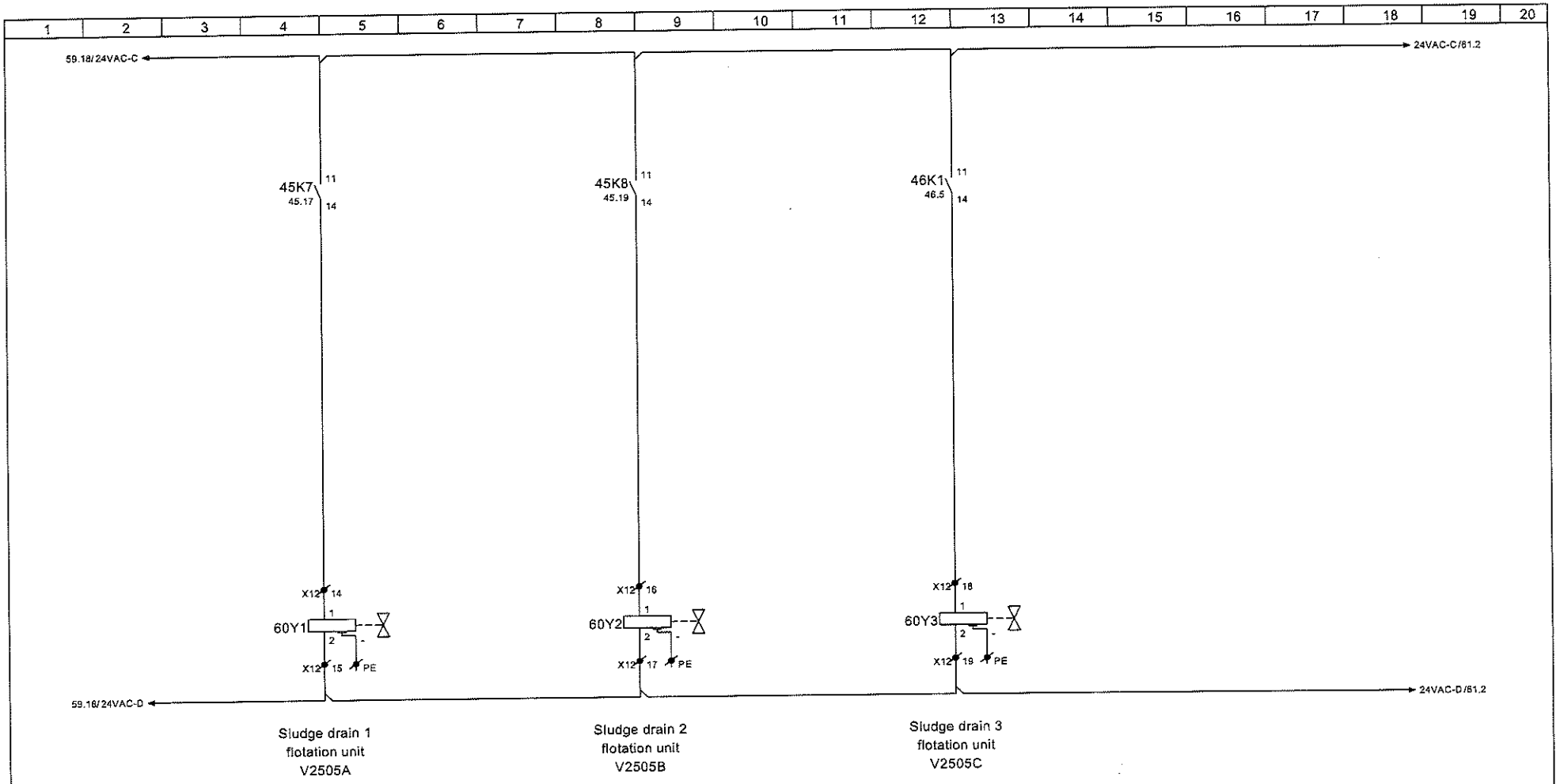


| | | | | | |
|---|---|---|---|---|---|
| Project : Austral Ilo - 112048 | | Revision : A | Created on : 17.07.06 | VISION ON SUSTAINABILITY | nijhuis WATER TECHNOLOGY |
| Order : 112048.145 | Remarks : PLC controlled panel | Revision by : PAV | Check : PAV | Copyright reserved | |
| Engineer : KRM | Title : Control wiring | Revision date : 28.12.12 | Page : 60 / 78 | www.nijhuis-water.com - T +31 (0)315 655 466 | |

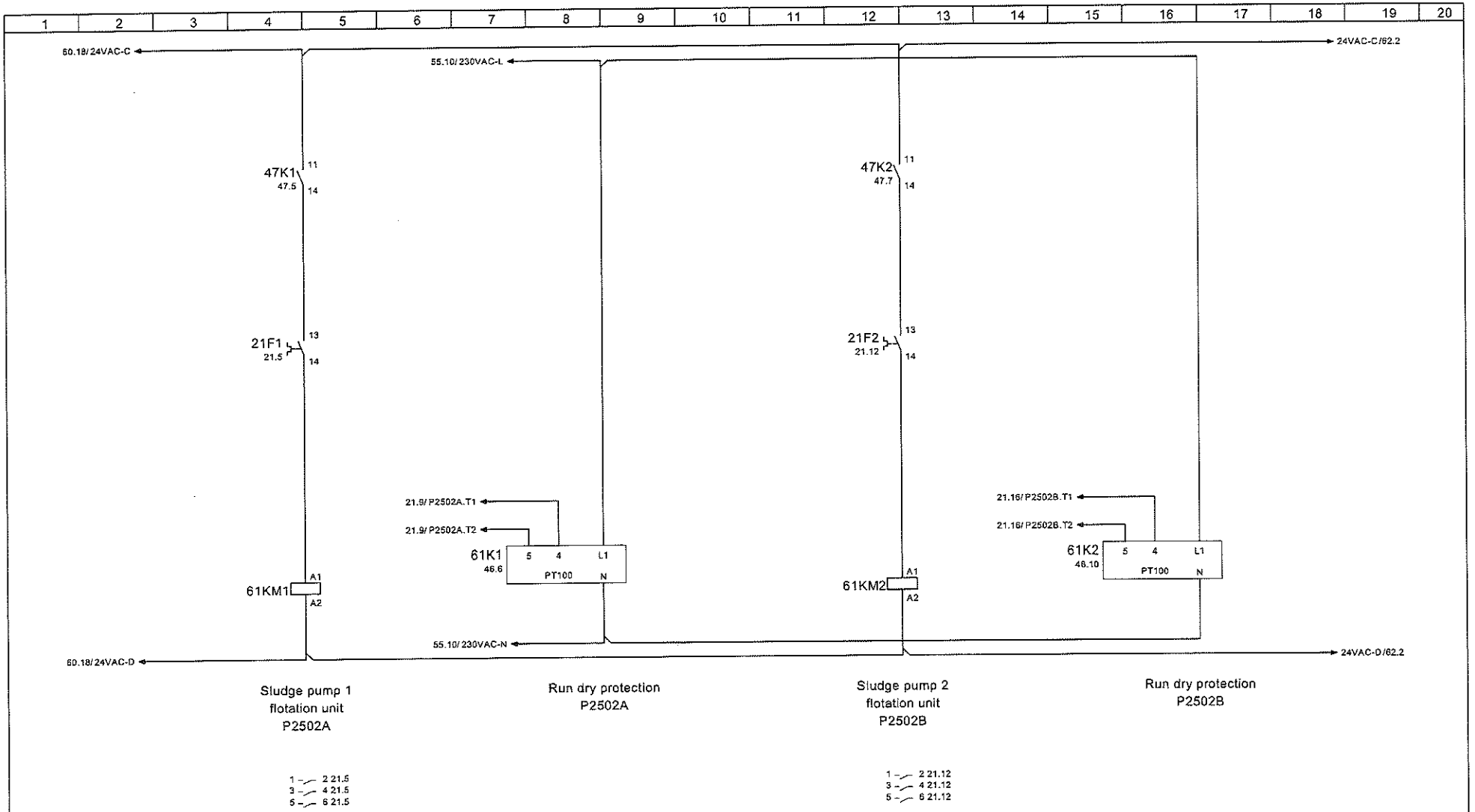


| | | | | | |
|---|---|---|---|---|---|
| Project : Austral Ilo - 112048 | | Revision : A | Created on : 17.07.06 | VISION ON SUSTAINABILITY | nijhuis WATER TECHNOLOGY |
| Order : 112048.145 | Remarks : PLC controlled panel | Revision by : PAV | Check : PAV | Copyright reserved | |
| Engineer : KRM | Title : Control wiring | Revision date : 28.12.12 | Page : 61 / 78 | www.nijhuis-water.com - T +31 (0)315 655 466 | |

| 1 | 2 | 3 | 4 | 5 | 6 | 7 | 8 | 9 | 10 | 11 | 12 | 13 | 14 | 15 | 16 | 17 | 18 | 19 | 20 |
|---|---|---|---|---|---|---|---|---|---|---|---|---|---|---|---|---|---|---|---|

61.18/24VAC-C ← → 24VAC-C/63.2

# Spare page

61.18/24VAC-D ← → 24VAC-D/63.2

| | | | | | |
|---|---|---|---|---|---|
| Project : Austral Ilo - 112048 | | Revision : A | Created on : 17.07.06 | VISION ON SUSTAINABILITY | nijhuis WATER TECHNOLOGY |
| Order : 112048.145 | Remarks : PLC controlled panel | Revision by : PAV | Check : PAV | Copyright reserved | |
| Engineer : KRM | Title : Control wiring | Revision date : 28.12.12 | Page : 62 / 78 | www.nijhuis-water.com - T +31 (0)315 655 466 | |

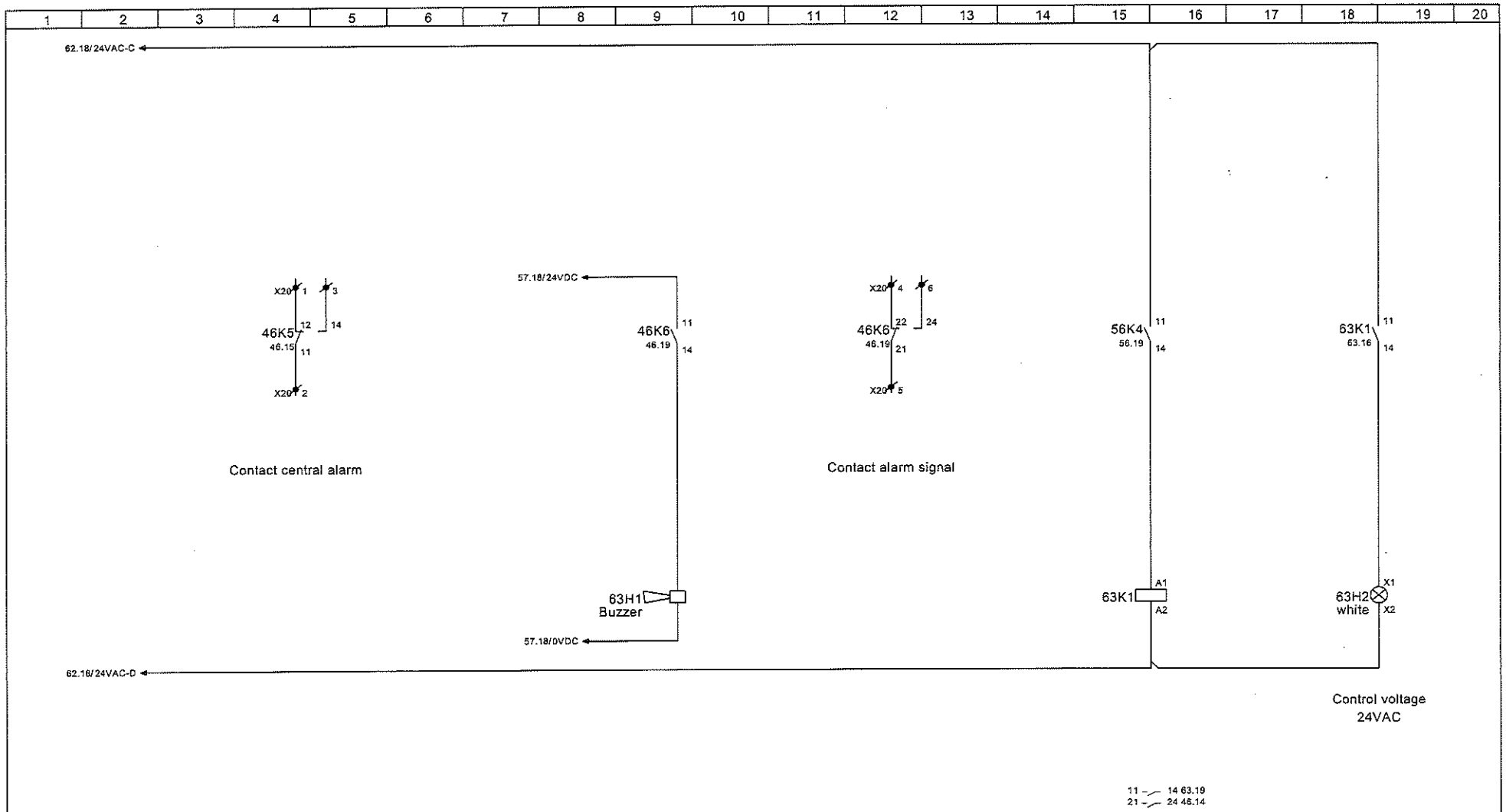


| | | | | | |
|---|---|---|---|---|---|
| Project : Austral Ilo - 112048 | | Revision : A | Created on : 17.07.06 | VISION ON SUSTAINABILITY | nijhuis WATER TECHNOLOGY |
| Order : 112048.145 | Remarks : PLC controlled panel | Revision by : PAV | Check : PAV | Copyright reserved | |
| Engineer : KRM | Title : Control wiring | Revision date : 28.12.12 | Page : 63 / 78 | www.nijhuis-water.com - T +31 (0)315 655 466 | |

| 1 | 2 | 3 | 4 | 5 | 6 | 7 | 8 | 9 | 10 | 11 | 12 | 13 | 14 | 15 | 16 | 17 | 18 | 19 | 20 |
|---|---|---|---|---|---|---|---|---|---|---|---|---|---|---|---|---|---|---|---|

* Cable diameters are for indication only, NWT doesn't take any responsibility for it! See general instructions on page 6 for further details
* Cables must be selected in conformance with power consumption, environmental conditions, method of installation, local regulations and conditions

| X1 | | | | |
|---|---|---|---|---|
| Cross Reference | 10.3 | 10.3 | 10.3 | 10.4 |
| Terminal | 1 | 2 | 3 | PE |

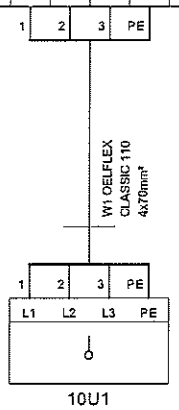


L1 L2 L3 PE

| | | | | | |
|---|---|---|---|---|---|
| Project : Austral Ilo - 112048 | | Revision : A | Created on : 17.07.06 | VISION ON SUSTAINABILITY | nijhuis WATER TECHNOLOGY |
| Order : 112048.145 | Remarks : PLC controlled panel | Revision by : PAV | Check : PAV | Copyright reserved | |
| Engineer : PAV | Title : Main power supply | Revision date : 13.03.13 | Page : 64 / 78 | www.nijhuis-water.com - T +31 (0)315 555 465 | |

| 1 | 2 | 3 | 4 | 5 | 6 | 7 | 8 | 9 | 10 | 11 | 12 | 13 | 14 | 15 | 16 | 17 | 18 | 19 | 20 |
|---|---|---|---|---|---|---|---|---|---|---|---|---|---|---|---|---|---|---|---|

* Cable diameters are for indication only, NWT doesn't take any responsibility for it! See general instructions on page 6 for further details
* Cables must be selected in conformance with power consumption, environmental conditions, method of installation, local regulations and conditions

## X2

| Cross Reference | Terminal | Cable | Device |
|---|---|---|---|
| 11.5 | 1 | W2 OELFLEX CLASSIC 110 7x6mm² | 11M1 U1 |
| 11.5 | 2 | | 11M1 V1 |
| 11.5 | 3 | | 11M1 W1 |
| 11.6 | PE | | 11M1 PE |
| 11.7 | 4 | | 11M1 W2 |
| 11.7 | 5 | | 11M1 U2 |
| 11.7 | 6 | | 11M1 V2 |
| 11.8 | PE | | 11M1 PE |
| 11.1.5 | 7 | W3 OELFLEX CLASSIC 110 7x1.5mm² | 11U1 L1 |
| 11.1.5 | 8 | | 11U1 L2(N) |
| 11.1.6 | PE | | 11U1 PE |
| 11.1.7 | 9 | | 11U1 1 |
| 11.1.8 | 10 | | 11U1 2 |
| 11.1.8 | PE | | 11U1 PE |
| 11.1.9 | 11 | | 11U1 20 |
| 11.1.10 | 12 | | 11U1 21 |
| 11.1.10 | PE | | 11U1 PE |
| 12.5 | 13 | W6 OELFLEX CLASSIC 110 3x1.5mm² | 12U1 L1 |
| 12.5 | 14 | | 12U1 N |
| 12.6 | PE | | 12U1 PE |
| 13.5 | 15 | W9 OELFLEX CLASSIC 110 3x1.5mm² | 13U1 L1 |
| 13.5 | 16 | | 13U1 N |
| 13.6 | PE | | 13U1 PE |
| 14.5 | 17 | W12 OELFLEX CLASSIC 110 3x1.5mm² | 14U1 L1 |
| 14.5 | 18 | | 14U1 N |
| 14.6 | PE | | 14U1 PE |
| 15.4 | 19 | W15 OELFLEX CLASSIC 110 4x2.5mm² | 15M1 U |
| 15.4 | 20 | | 15M1 V |
| 15.4 | 21 | | 15M1 W |
| 15.5 | PE | | 15M1 PE |
| 15.8 | 22 | W16 OELFLEX CLASSIC 110 4x2.5mm² | 15M2 U |
| 15.8 | 23 | | 15M2 V |
| 15.8 | 24 | | 15M2 W |
| 15.9 | PE | | 15M2 PE |

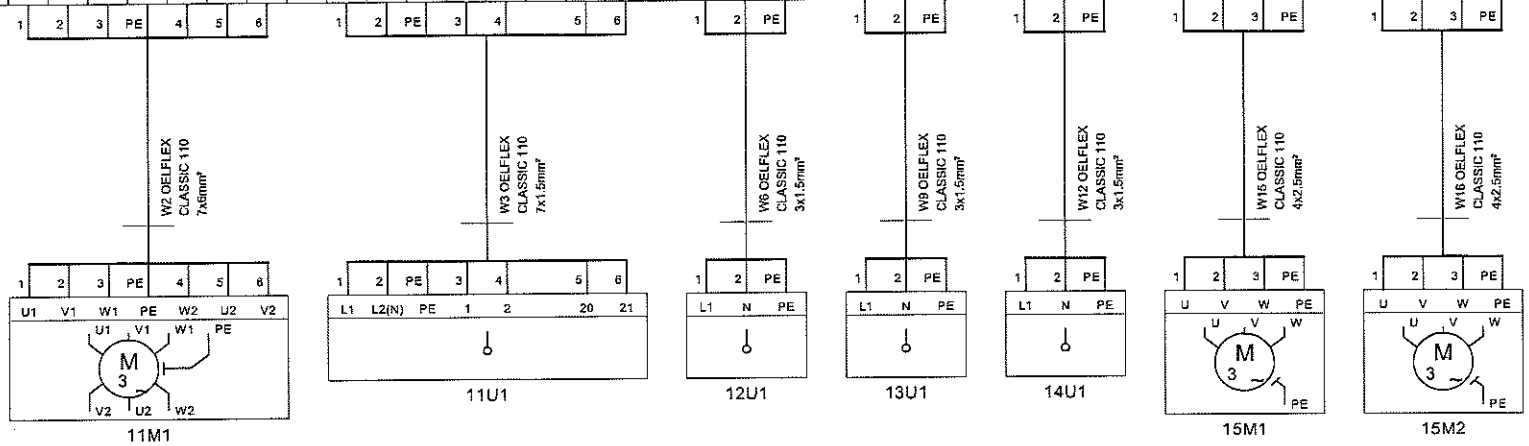


| Device | Description |
|---|---|
| 11M1 | Feed pump flotation unit P0201 |
| 11U1 | Influent control valve flotation unit V0203 |
| 12U1 | Detection failure control valve V0203 |
| 13U1 | Detection closed V0203 |
| 14U1 | Dosing pump coagulant P1201 |
| 15M1 | Dosing pump ferric P1401 |
| 15M2 | Dosing pump neutraliser P1501 |
| | Mixer flocculant MX1801 |
| | Dosing screw flocculant DD1801 |

| | | | |
|---|---|---|---|
| Project : Austral Ilo - 112048 | | Revision : A | Created on : 17.07.06 |
| Order : 112048.145 | Remarks : PLC controlled panel | Revision by : PAV | Check : PAV |
| Engineer : PAV | Title : Motor groups | Revision date : 13.03.13 | Page : 65 / 78 |

VISION ON SUSTAINABILITY

Copyright reserved

www.nijhuis-water.com - T +31 (0)315 555 456

nijhuis WATER TECHNOLOGY

| 1 | 2 | 3 | 4 | 5 | 6 | 7 | 8 | 9 | 10 | 11 | 12 | 13 | 14 | 15 | 16 | 17 | 18 | 19 | 20 |
|---|---|---|---|---|---|---|---|---|---|---|---|---|---|---|---|---|---|---|---|

* Cable diameters are for indication only, NWT doesn't take any responsibility for it! See general instructions on page 6 for further details
* Cables must be selected in conformance with power consumption, environmental conditions, method of installation, local regulations and conditions

## X2

| Cross Reference | Terminal |
|---|---|
| 15.12 | 25 |
| 15.12 | 26 |
| 15.13 | 27 |
| 15.14 | 28 |
| 15.15 | PE |
| 15.17 | 29 |
| 15.17 | 30 |
| 15.17 | 31 |
| 15.18 | PE |
| 16.4 | 32 |
| 16.4 | 33 |
| 16.4 | 34 |
| 16.5 | PE |
| 16.5 | S |
| 17.4 | 35 |
| 17.4 | 36 |
| 17.4 | 37 |
| 17.5 | PE |
| 17.6 | 38 |
| 17.6 | 39 |
| 17.6 | 40 |
| 17.7 | PE |
| 18.4 | 41 |
| 18.4 | 42 |
| 18.4 | 43 |
| 18.5 | PE |
| 18.5 | S |
| 19.4 | 44 |
| 19.4 | 45 |
| 19.4 | 46 |
| 19.5 | PE |
| 19.5 | S |

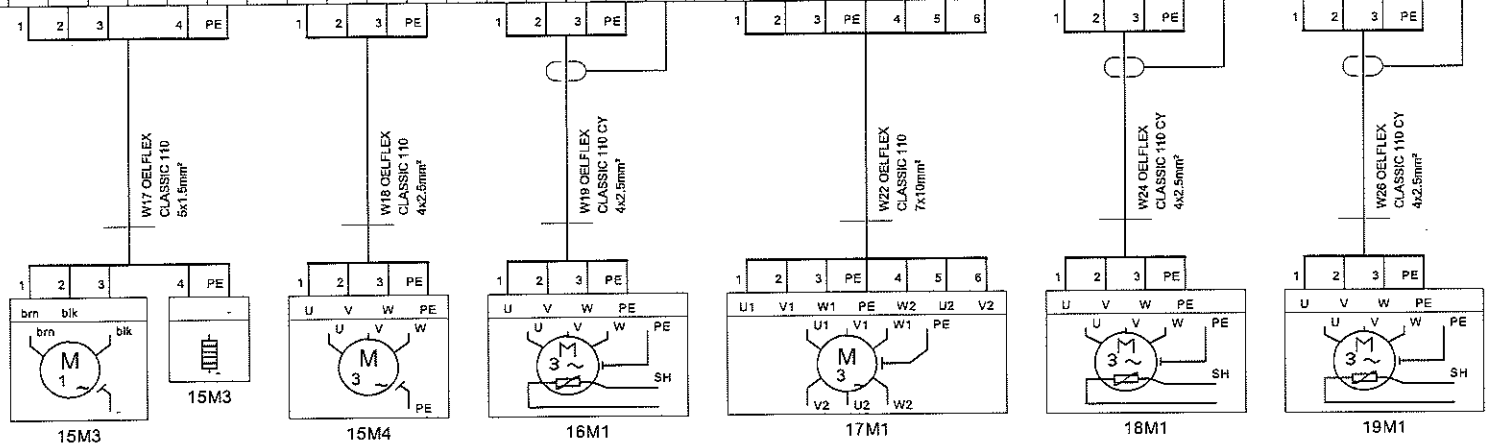


Vibrator flocculant M1801
Heater flocculant HE1801
Transfer pump flocculant P1802
Dosing pump flocculant P1801
Recirculation pump flotation unit P2501
Top skimmer 1 flotation unit SC2501A
Top skimmer 2 flotation unit SC2501B

| | | | | |
|---|---|---|---|---|
| Project : Austral Ilo - 112048 | | Revision : A | Created on : 17.07.06 | VISION ON SUSTAINABILITY |
| Order : 112048.145 | Remarks : PLC controlled panel | Revision by : PAV | Check : PAV | Copyright reserved |
| Engineer : PAV | Title : Motor groups | Revision date : 13.03.13 | Page : 66 / 78 | www.nijhuis-water.com - T +31 (0)315 655 466 |

nijhuis WATER TECHNOLOGY

| 1 | 2 | 3 | 4 | 5 | 6 | 7 | 8 | 9 | 10 | 11 | 12 | 13 | 14 | 15 | 16 | 17 | 18 | 19 | 20 |
|---|---|---|---|---|---|---|---|---|---|---|---|---|---|---|---|---|---|---|---|

* Cable diameters are for indication only, NWT doesn't take any responsibility for it! See general instructions on page 6 for further details
* Cables must be selected in conformance with power consumption, environmental conditions, method of installation, local regulations and conditions

## X2

| Cross Reference | 20.4 | 20.4 | 20.4 | 20.5 | 20.5 | | 21.5 | 21.5 | 21.5 | 21.6 | | 21.12 | 21.12 | 21.12 | 21.13 | | 23.4 | 23.5 | 23.6 | | 23.8 | 23.9 | 23.9 | | 23.11 | 23.12 | 23.13 |
|---|---|---|---|---|---|---|---|---|---|---|---|---|---|---|---|---|---|---|---|---|---|---|---|---|---|---|---|
| Terminal | 47 | 48 | 49 | PE | S | | 50 | 51 | 52 | PE | | 53 | 54 | 55 | PE | | 56 | 57 | PE | | 58 | 59 | PE | | 60 | 61 | PE |

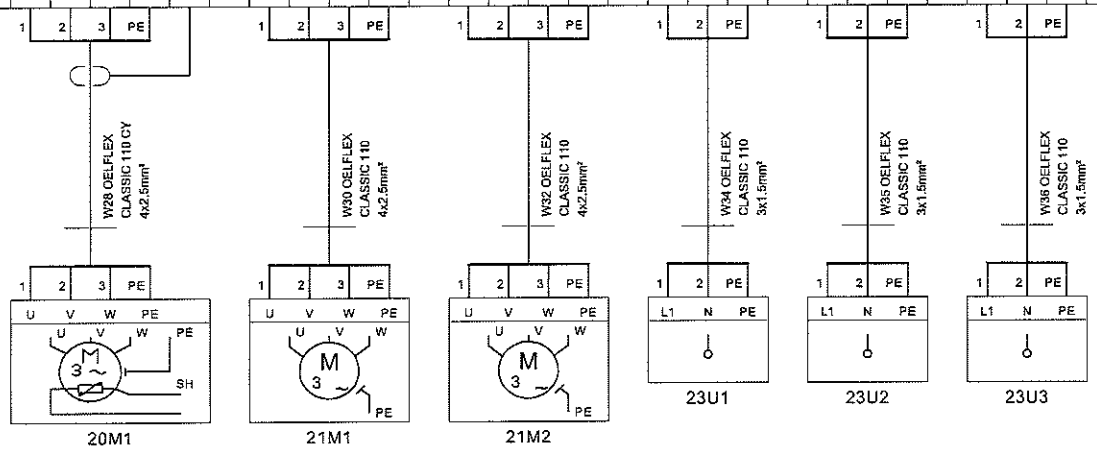


| Bottom skimmer flotation unit SC2502 | Sludge pump 1 flotation unit P2502A | Sludge pump 2 flotation unit P2502B | Power supply flow measuring influent water FIC0201 | Power supply pH measuring flocculator QIC0801 | Power supply flow measuring sludge pumps FIC2502 |
|---|---|---|---|---|---|
| " " " " | " " " | " " " | " " | " " | " |

| | | | | | |
|---|---|---|---|---|---|
| Project : Austral Ilo - 112048 | | Revision : A | Created on : 17.07.06 | VISION ON SUSTAINABILITY | nijhuis WATER TECHNOLOGY |
| Order : 112048.145 | Remarks : PLC controlled panel | Revision by : PAV | Check : PAV | Copyright reserved | |
| Engineer : PAV | Title : Motor groups | Revision date : 13.03.13 | Page : 67 / 78 | www.nijhuis-water.com - T +31 (0)315 655 466 | |

| 1 | 2 | 3 | 4 | 5 | 6 | 7 | 8 | 9 | 10 | 11 | 12 | 13 | 14 | 15 | 16 | 17 | 18 | 19 | 20 |
|---|---|---|---|---|---|---|---|---|---|---|---|---|---|---|---|---|---|---|---|

* Cable diameters are for indication only, NWT doesn't take any responsibility for it! See general instructions on page 6 for further details
* Cables must be selected in conformance with power consumption, environmental conditions, method of installation, local regulations and conditions

| X3 | | | | | | | | | | | | | | | | | | |
|---|---|---|---|---|---|---|---|---|---|---|---|---|---|---|---|---|---|---|
| Cross Reference | 26.6 | 26.6 | | 26.7 | 26.7 | | 26.9 | 26.9 | | 26.9 | 26.9 | | 26.11 | 26.11 | | 26.12 | 26.12 | |
| Terminal | 1 | 2 | | 3 | 4 | | 5 | 6 | | 7 | 8 | | 9 | 10 | | 11 | 12 | |

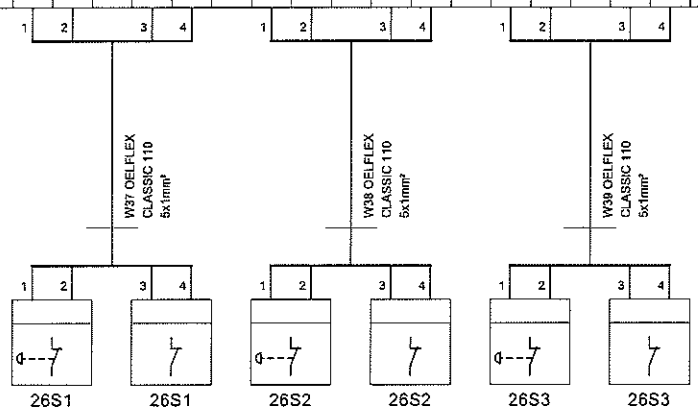


Emergency stop 1 " " "

Emergency stop 2 " " "

Emergency stop 3 " " "

| | | | | | |
|---|---|---|---|---|---|
| Project : Austral ilo - 112048 | | Revision : A | Created on : 17.07.06 | VISION ON SUSTAINABILITY | nijhuis WATER TECHNOLOGY |
| Order : 112048.145 | Remarks : PLC controlled panel | Revision by : PAV | Check : PAV | Copyright reserved | |
| Engineer : PAV | Title : Emergency stop | Revision date : 13.03.13 | Page : 68 / 78 | www.nijhuis-water.com - T +31 (0)315 655 466 | |

| 1 | 2 | 3 | 4 | 5 | 6 | 7 | 8 | 9 | 10 | 11 | 12 | 13 | 14 | 15 | 16 | 17 | 18 | 19 | 20 |
|---|---|---|---|---|---|---|---|---|---|---|---|---|---|---|---|---|---|---|---|

* Cable diameters are for indication only, NWT doesn't take any responsibility for it! See general instructions on page 6 for further details
* Cables must be selected in conformance with power consumption, environmental conditions, method of installation, local regulations and conditions

## X4

| Cross Reference | 11.1.13 | 11.1.14 | 11.1.14 | 36.4 | 36.4 | 36.4 | 36.5 | 36.5 | 36.8 | 36.8 | 36.8 | 36.16 | 36.16 | 36.16 | 36.17 | 36.17 | 41.4 | 41.4 | 41.4 | 41.8 | 41.8 | 41.8 | 41.12 | 41.12 | 41.12 | 41.16 | 41.16 | 41.16 | 42.4 | 42.4 | 42.4 | 42.12 | 42.12 | 42.12 |
|---|---|---|---|---|---|---|---|---|---|---|---|---|---|---|---|---|---|---|---|---|---|---|---|---|---|---|---|---|---|---|---|---|---|---|
| Terminal | 1 | 2 | PE | 3 | 4 | 5 | 6 | PE | 7 | 8 | PE | 9 | 10 | 11 | 12 | PE | 13 | 14 | PE | 15 | 16 | PE | 17 | 18 | PE | 19 | 20 | PE | 21 | 22 | PE | 23 | 24 | PE |

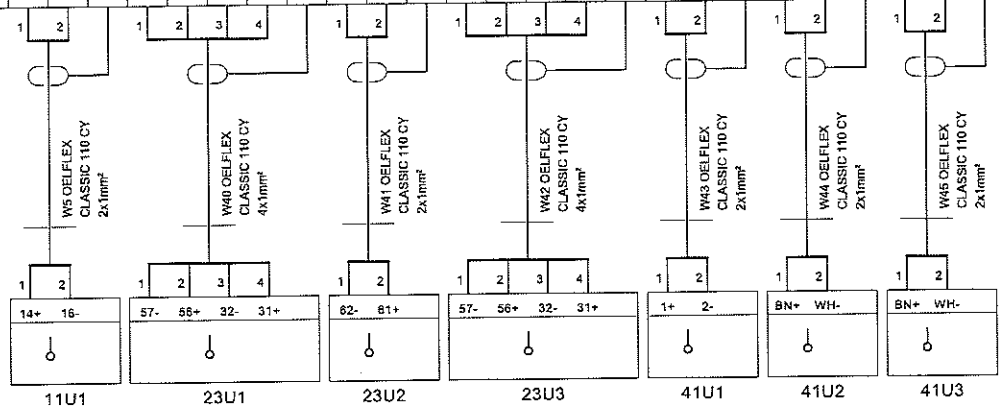


| Terminal | Description |
|---|---|
| 1 | Position meas. valve V0203 |
| 2 | " |
| PE | " |
| 3 | Flow measuring influent water flotation unit FIC0201 |
| 4 | " |
| 5 | " |
| 6 | " |
| PE | " |
| 7 | pH measuring flocculator QIC0801 |
| 8 | " |
| PE | " |
| 9 | Flow measuring sludge pumps flotation unit FIC2502 |
| 10 | " |
| 11 | " |
| 12 | " |
| PE | " |
| 13 | Level measuring balance tank LC0201 |
| 14 | " |
| PE | " |
| 15 | Level measuring sludge compartment LC2502A |
| 16 | " |
| PE | " |
| 17 | Level measuring sludge compartment LC2502B |
| 18 | " |
| PE | " |
| 19 | Spare 2-wire [D] analog input |
| 20 | " |
| PE | " |
| 21 | " |
| 22 | " |
| PE | " |
| 23 | Spare 4-wire [C] analog input |
| 24 | " |
| PE | " |

| | | | |
|---|---|---|---|
| Project : Austral Ilo - 112048 | | Revision : A | Created on : 17.07.06 |
| Order : 112048.145 | Remarks : PLC controlled panel | Revision by : PAV | Check : PAV |
| Engineer : PAV | Title : Analog input signals | Revision date : 13.03.13 | Page : 69 / 78 |

VISION ON SUSTAINABILITY

Copyright reserved

www.nijhuis-water.com - T +31 (0)315 655 466

nijhuis WATER TECHNOLOGY

| 1 | 2 | 3 | 4 | 5 | 6 | 7 | 8 | 9 | 10 | 11 | 12 | 13 | 14 | 15 | 16 | 17 | 18 | 19 | 20 |
|---|---|---|---|---|---|---|---|---|---|---|---|---|---|---|---|---|---|---|---|

* Cable diameters are for indication only, NWT doesn't take any responsibility for it! See general instructions on page 6 for further details
* Cables must be selected in conformance with power consumption, environmental conditions, method of installation, local regulations and conditions

| X5 | | | | | | | | | | | | |
|---|---|---|---|---|---|---|---|---|---|---|---|---|
| Cross Reference | 11.1.11 | 11.1.12 | 11.1.12 | 12.10 | 12.11 | 12.11 | 13.10 | 13.11 | 13.11 | 14.10 | 14.11 | 14.11 |
| Terminal | 1 | 2 | PE | 3 | 4 | PE | 5 | 6 | PE | 7 | 8 | PE |

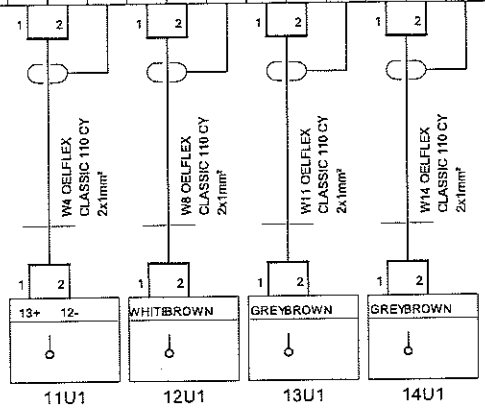


Position control. control valve V0203 = =

Capacity control dosing pump P1201 = =

Capacity control dosing pump P1401 = =

Capacity control dosing pump P1501 = =

| | | | | | |
|---|---|---|---|---|---|
| Project : Austral ilo - 112048 | | Revision : A | Created on : 17.07.06 | VISION ON SUSTAINABILITY | nijhuis WATER TECHNOLOGY |
| Order : 112048.145 | Remarks : PLC controlled panel | Revision by : PAV | Check : PAV | Copyright reserved | |
| Engineer : PAV | Title : Analog output signals | Revision date : 13.03.13 | Page : 70 / 78 | www.nijhuis-water.com - T +31 (0)315 655 466 | |

| 1 | 2 | 3 | 4 | 5 | 6 | 7 | 8 | 9 | 10 | 11 | 12 | 13 | 14 | 15 | 16 | 17 | 18 | 19 | 20 |
|---|---|---|---|---|---|---|---|---|---|---|---|---|---|---|---|---|---|---|---|

* Cable diameters are for indication only, NWT doesn't take any responsibility for it! See general instructions on page 6 for further details
* Cables must be selected in conformance with power consumption, environmental conditions, method of installation, local regulations and conditions

## X6

| | | | | | | | | | | | | | | | | | | | |
|---|---|---|---|---|---|---|---|---|---|---|---|---|---|---|---|---|---|---|---|
| Cross Reference | 16.7 | 16.7 | 16.8 | | 18.7 | 18.7 | 18.8 | | 19.7 | 19.7 | 19.8 | | 20.7 | 20.7 | 20.8 | | | | |
| Terminal | 1 | 2 | S | | 3 | 4 | S | | 5 | 6 | S | | 7 | 8 | S | | | | |

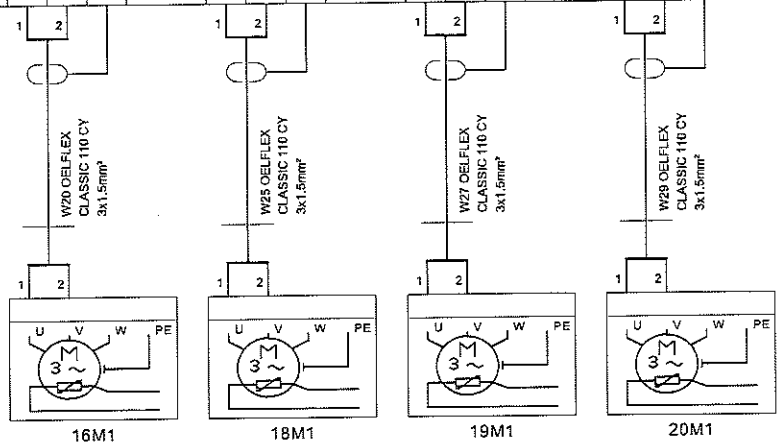


PTC protection P1801 = =

PTC protection SC2501A = =

PTC protection SC2501B = =

PTC protection SC2502 = =

| | | | | | |
|---|---|---|---|---|---|
| Project : Austral Ilo - 112048 | | Revision : A | Created on : 17.07.06 | VISION ON SUSTAINABILITY | nijhuis WATER TECHNOLOGY |
| Order : 112048.145 | Remarks : PLC controlled panel | Revision by : PAV | Check : PAV | Copyright reserved | |
| Engineer : PAV | Title : Temperature protections (PTC) | Revision date : 13.03.13 | Page : 71 / 78 | www.nijhuis-water.com - T +31 (0)315 655 466 | |

| 1 | 2 | 3 | 4 | 5 | 6 | 7 | 8 | 9 | 10 | 11 | 12 | 13 | 14 | 15 | 16 | 17 | 18 | 19 | 20 |
|---|---|---|---|---|---|---|---|---|---|---|---|---|---|---|---|---|---|---|---|

* Cable diameters are for indication only, NWT doesn't take any responsibility for it! See general instructions on page 6 for further details
* Cables must be selected in conformance with power consumption, environmental conditions, method of installation, local regulations and conditions

| X8 | | | | | | | | | |
|---|---|---|---|---|---|---|---|---|---|
| Cross Reference | 16.10 | 16.10 | 16.11 | 21.7 | 21.8 | 21.8 | 21.14 | 21.15 | 21.15 |
| Terminal | 1 | 2 | PE | 3 | 4 | PE | 5 | 6 | PE |

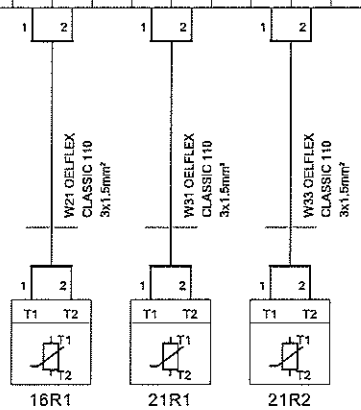


Run dry protection P1801 " "

Run dry protection P2502A " "

Run dry protection P2502B " "

| | | | | | |
|---|---|---|---|---|---|
| Project : Austral Ilo - 112048 | | Revision : A | Created on : 17.07.06 | | |
| Order : 112048.145 | Remarks : PLC controlled panel | Revision by : PAV | Check : PAV | VISION ON SUSTAINABILITY | nijhuis WATER TECHNOLOGY |
| Engineer : PAV | Title : Temperature protections (PT100) | Revision date : 13.03.13 | Page : 72 / 78 | Copyright reserved www.nijhuis-water.com - T +31 (0)315 655 466 | |

| 1 | 2 | 3 | 4 | 5 | 6 | 7 | 8 | 9 | 10 | 11 | 12 | 13 | 14 | 15 | 16 | 17 | 18 | 19 | 20 |
|---|---|---|---|---|---|---|---|---|---|---|---|---|---|---|---|---|---|---|---|

* Cable diameters are for indication only, NWT doesn't take any responsibility for it! See general instructions on page 6 for further details
* Cables must be selected in conformance with power consumption, environmental conditions, method of installation, local regulations and conditions

## X10

| | | | | | | | | | | | | | | | | | | | | | |
|---|---|---|---|---|---|---|---|---|---|---|---|---|---|---|---|---|---|---|---|---|---|
| Cross Reference | 49.13 | 49.13 | | 50.1.5 | 50.1.5 | | 51.5 | 51.5 | | 51.13 | 51.13 | 51.13 | | 52.5 | 52.5 | | 52.13 | 52.13 | 52.13 | | |
| Terminal | 1 | 2 | | 3 | 4 | | 5 | 6 | | 7 | 8 | PE | | 9 | 10 | | 11 | 12 | PE | | |

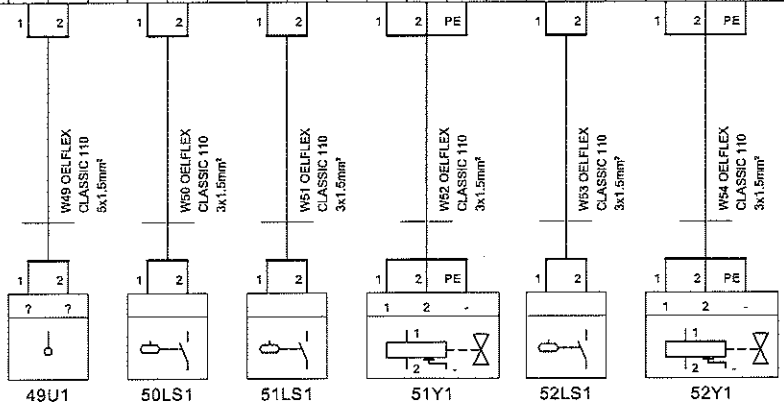


| | | | | | | | | | | | | | | | | | | | | | |
|---|---|---|---|---|---|---|---|---|---|---|---|---|---|---|---|---|---|---|---|---|---|
| Spare | " | | Low level detection coagulant LS1201 | " | | Low level detection ferric LS1401 | " | | Safey valve ferric V1411 | " | " | | Low level detection neutraliser LS1501 | " | | Safety valve neutraliser V1511 | " | " | | | |

| | | | | | |
|---|---|---|---|---|---|
| Project : Austral Ilo - 112048 | | Revision : A | Created on : 17.07.06 | | |
| Order : 112048.145 | Remarks : PLC controlled panel | Revision by : PAV | Check : PAV | VISION ON SUSTAINABILITY | nijhuis WATER TECHNOLOGY |
| Engineer : PAV | Title : Process connections group 1 | Revision date : 13.03.13 | Page : 73 / 78 | Copyright reserved<br>www.nijhuis-water.com - T +31 (0)315 655 466 | |

| 1 | 2 | 3 | 4 | 5 | 6 | 7 | 8 | 9 | 10 | 11 | 12 | 13 | 14 | 15 | 16 | 17 | 18 | 19 | 20 |
|---|---|---|---|---|---|---|---|---|---|---|---|---|---|---|---|---|---|---|---|

* Cable diameters are for indication only, NWT doesn't take any responsibility for it! See general instructions on page 6 for further details
* Cables must be selected in conformance with power consumption, environmental conditions, method of installation, local regulations and conditions

## X11

| | | | | | | | | | | | | | | | | | | | | | | | | | | | | | | | | | | |
|---|---|---|---|---|---|---|---|---|---|---|---|---|---|---|---|---|---|---|---|---|---|---|---|---|---|---|---|---|---|---|---|---|---|---|
| Cross Reference | 53.5 | | 53.5 | | 53.6 | | 53.12 | 53.12 | 53.12 | | 53.16 | 53.17 | 53.17 | 54.17 | 54.17 | 54.17 | 55.14 | 55.14 | 55.14 | | 55.18 | 55.18 | 55.18 | | | | | | | | | | | |
| Terminal | 1 | | 2 | | 3 | | 4 | 5 | PE | | 6 | 7 | PE | 8 | 9 | PE | 10 | 11 | PE | | 12 | 13 | PE | | | | | | | | | | | |

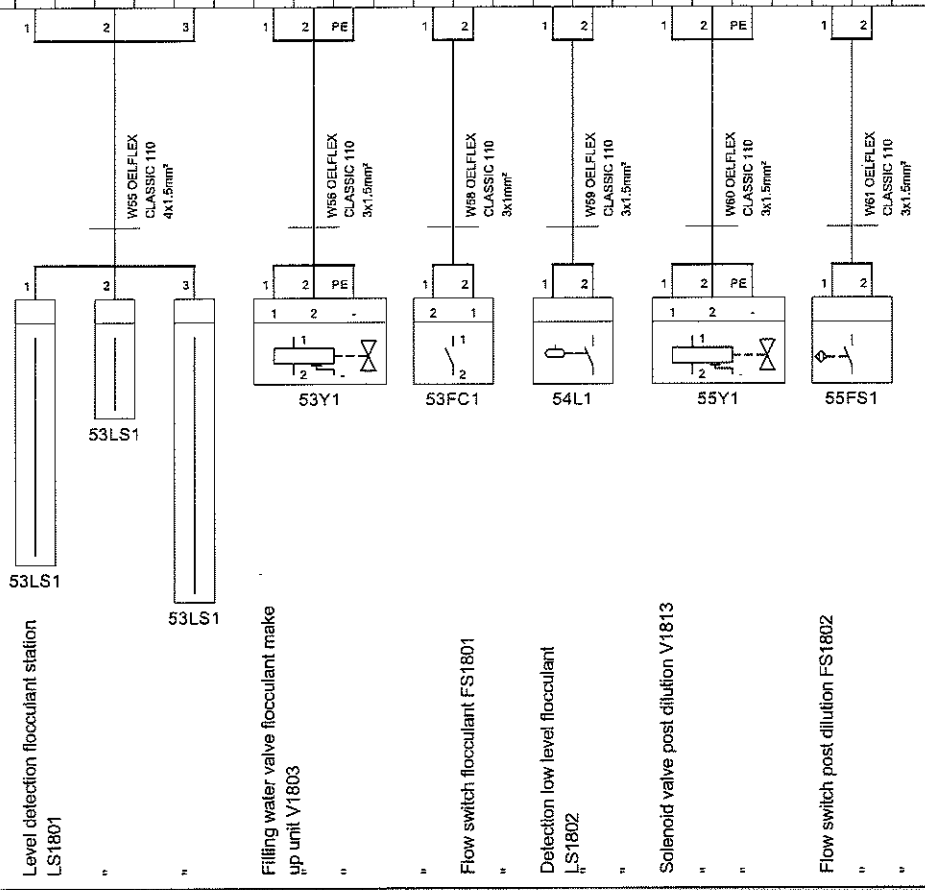


| | | | | | |
|---|---|---|---|---|---|
| Project : Austral Ilo - 112048 | | Revision : A | Created on : 17.07.06 | VISION ON SUSTAINABILITY | nijhuis WATER TECHNOLOGY |
| Order : 112048.145 | Remarks : PLC controlled panel | Revision by : PAV | Check : PAV | Copyright reserved | |
| Engineer : PAV | Title : Process connections group 2 | Revision date : 13.03.13 | Page : 74 / 78 | www.nijhuis-water.com - T +31 (0)315 655 466 | |

| 1 | 2 | 3 | 4 | 5 | 6 | 7 | 8 | 9 | 10 | 11 | 12 | 13 | 14 | 15 | 16 | 17 | 18 | 19 | 20 |
|---|---|---|---|---|---|---|---|---|---|---|---|---|---|---|---|---|---|---|---|

* Cable diameters are for indication only, NWT doesn't take any responsibility for it! See general instructions on page 6 for further details
* Cables must be selected in conformance with power consumption, environmental conditions, method of installation, local regulations and conditions

## X12

| Cross Reference | 57.7 | 57.7 | 57.11 | 57.15 | 57.15 | 57.16 | | 59.5 | 59.5 | 59.5 | | 59.9 | 59.9 | 59.9 | | 59.13 | 59.13 | 59.13 | | 59.17 | 59.17 | 59.17 | | 60.5 | 60.5 | 60.5 | | 60.9 | 60.9 | 60.9 | | 60.13 | 60.13 | 60.13 |
|---|---|---|---|---|---|---|---|---|---|---|---|---|---|---|---|---|---|---|---|---|---|---|---|---|---|---|---|---|---|---|---|---|---|---|
| Terminal | 1 | 2 | 3 | 4 | 5 | PE | | 6 | 7 | PE | | 8 | 9 | PE | | 10 | 11 | PE | | 12 | 13 | PE | | 14 | 15 | PE | | 16 | 17 | PE | | 18 | 19 | PE |

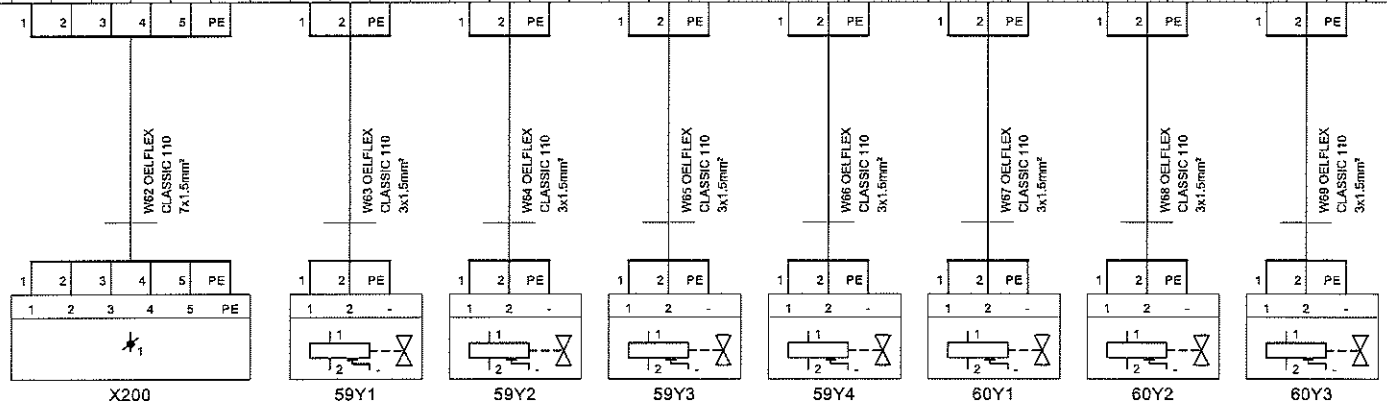


| | |
|---|---|
| Pressure switch recirculation pump | PS2501 |
| Pressure switch compressed air | PS2502 |
| Aeration valve flotation unit V2513 | " " |
| Sand drain 1 flotation unit V2505A | " " |
| Sand drain 2 flotation unit V2505B | " " |
| Sand drain 3 flotation unit V2505C | " " |
| Sand drain 4 flotation unit V2505D | " " |
| Sludge drain 1 flotation unit V2505A | " " |
| Sludge drain 2 flotation unit V2505B | " " |
| Sludge drain 3 flotation unit V2505C | " " |

| | | | |
|---|---|---|---|
| Project : Austral Ilo - 112048 | | Revision : A | Created on : 17.07.06 |
| Order : 112048.145 | Remarks : PLC controlled panel | Revision by : PAV | Check : PAV |
| Engineer : PAV | Title : Process connections group 3 | Revision date : 13.03.13 | Page : 75 / 78 |

VISION ON SUSTAINABILITY

Copyright reserved

www.nijhuis-water.com - T +31 (0)315 655 466

nijhuis WATER TECHNOLOGY

| 1 | 2 | 3 | 4 | 5 | 6 | 7 | 8 | 9 | 10 | 11 | 12 | 13 | 14 | 15 | 16 | 17 | 18 | 19 | 20 |
|---|---|---|---|---|---|---|---|---|---|---|---|---|---|---|---|---|---|---|---|

* Cable diameters are for indication only, NWT doesn't take any responsibility for it! See general instructions on page 6 for further details
* Cables must be selected in conformance with power consumption, environmental conditions, method of installation, local regulations and conditions

| X20 | | | | | | | |
|---|---|---|---|---|---|---|---|
| Cross Reference | 63.4 | 63.4 | 63.5 | 63.12 | 63.12 | 63.13 | |
| Terminal | 1 | 2 | 3 | 4 | 5 | 6 | |

Contact central alarm
=
=
Contact alarm signal
=
=

| | | | | | |
|---|---|---|---|---|---|
| Project : Austral Ilo - 112048 | | Revision : A | Created on : 17.07.06 | VISION ON SUSTAINABILITY | nijhuis WATER TECHNOLOGY |
| Order : 112048.145 | Remarks : PLC controlled panel | Revision by : PAV | Check : PAV | Copyright reserved | |
| Engineer : PAV | Title : Contacts central alarm | Revision date : 13.03.13 | Page : 76 / 78 | www.nijhuis-water.com - T +31 (0)315 655 466 | |

| 1 | 2 | 3 | 4 | 5 | 6 | 7 | 8 | 9 | 10 | 11 | 12 | 13 | 14 | 15 | 16 | 17 | 18 | 19 | 20 |
|---|---|---|---|---|---|---|---|---|---|---|---|---|---|---|---|---|---|---|---|

* Cable diameters are for indication only, NWT doesn't take any responsibility for it! See general instructions on page 6 for further details
* Cables must be selected in conformance with power consumption, environmental conditions, method of installation, local regulations and conditions

## X101

| Cross Reference | 12.7 | 12.8 | 12.9 | 13.7 | 13.8 | 13.9 | 14.7 | 14.8 | 14.9 | 49.5 | 49.5 | 49.7 | 49.7 | 49.9 | 49.9 | 49.11 | 49.11 |
|---|---|---|---|---|---|---|---|---|---|---|---|---|---|---|---|---|---|
| Terminal | 1 | 2 | PE | 3 | 4 | PE | 5 | 6 | PE | 7 | 8 | 9 | 10 | 11 | 12 | 13 | 14 |

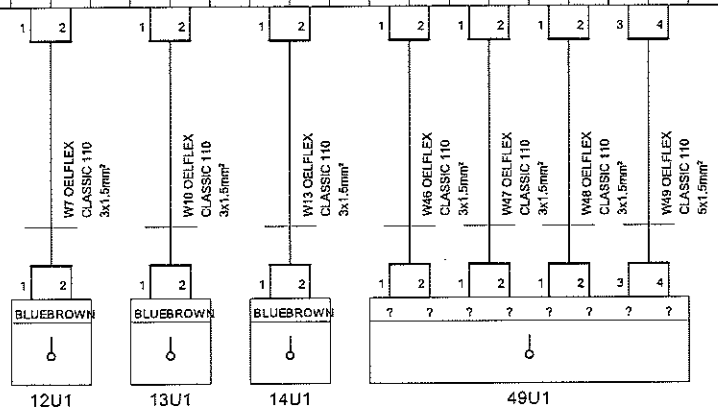


| Terminal | Function |
|---|---|
| 1 | Start/stop dosing pump P1201 |
| 2 | " " |
| PE | |
| 3 | Start/stop dosing pump P1401 |
| 4 | " " |
| PE | |
| 5 | Start/stop dosing pump P1501 |
| 6 | " " |
| PE | |
| 7 | Stop feeding balance tank due to high level LC0201 (To client) |
| 8 | " |
| 9 | Spare |
| 10 | " |
| 11 | " |
| 12 | " |
| 13 | Enable start sludge pumps P2502A/B (From client) |
| 14 | " (From client) |

| | | | |
|---|---|---|---|
| Project : Austral Ilo - 112048 | | Revision : A | Created on : 17.07.06 |
| Order : 112048.145 | Remarks : PLC controlled panel | Revision by : PAV | Check : PAV |
| Engineer : PAV | Title : External start/stop signals | Revision date : 13.03.13 | Page : 77 / 78 |

VISION ON SUSTAINABILITY

Copyright reserved

www.nijhuis-water.com - T +31 (0)315 655 466

nijhuis WATER TECHNOLOGY

| 1 | 2 | 3 | 4 | 5 | 6 | 7 | 8 | 9 | 10 | 11 | 12 | 13 | 14 | 15 | 16 | 17 | 18 | 19 | 20 |
|---|---|---|---|---|---|---|---|---|---|---|---|---|---|---|---|---|---|---|---|

* Cable diameters are for indication only, NWT doesn't take any responsibility for it! See general instructions on page 6 for further details
* Cables must be selected in conformance with power consumption, environmental conditions, method of installation, local regulations and conditions

| X102 | | | | | | | | | | | | |
|---|---|---|---|---|---|---|---|---|---|---|---|---|
| Cross Reference | 11.11 | 11.11 | | 11.12 | 11.13 | 11.13 | 17.12 | 17.13 | | 17.13 | 17.14 | 17.14 |
| Terminal | 1 | 2 | | 3 | 4 | PE | 5 | 6 | | 7 | 8 | PE |

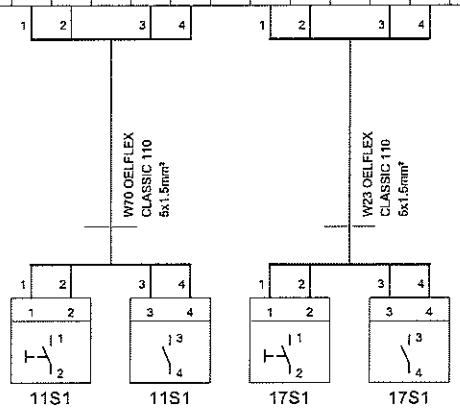


Auxiliary contacts local isolator P0201

Auxiliary contacts local isolator P2501

| | | | | | |
|---|---|---|---|---|---|
| Project : Austral Ilo - 112048 | | Revision : A | Created on : 17.07.06 | VISION ON SUSTAINABILITY | nijhuis WATER TECHNOLOGY |
| Order : 112048.145 | Remarks : PLC controlled panel | Revision by : PAV | Check : PAV | Copyright reserved | |
| Engineer : PAV | Title : Local isolators | Revision date : 13.03.13 | Page : 78 / 78 | www.nijhuis-water.com - T +31 (0)315 655 466 | |